medRxiv preprint doi: https://doi.org/10.1101/2024.10.24.24316053; this version posted October 24, 2024. The copyright holder for this preprint (which was not certified by peer review) is the author/funder, who has granted medRxiv a license to display the preprint in perpetuity. It is made available under a CC-BY 4.0 International license .

Quantifying the impact of norovirus transmission in the community on acute kidney injury hospitalisations in England: a mathematical modelling study

Authors:[1]*Hikaru Bolt, [1]Pratik Gupte, [2]Amy Douglas, [1]*Frank G. Sandmann, [1]Laurie Tomlinson, [1]Rosalind Eggo

Affiliations:

1. London School of Hygiene and Tropical Medicine, *Present address: Robert Koch Institute
2. Gastrointestinal Infections, Food Safety and One Health Division, UK Health Security Agency, London, UK

*Corresponding author:
Email: Hikaru.bolt@lshtm.ac.uk

NOTE: This preprint reports new research that has not been certified by peer review and should not be used to guide clinical practice.

medRxiv preprint doi: https://doi.org/10.1101/2024.10.24.24316053; this version posted October 24, 2024. The copyright holder for this preprint (which was not certified by peer review) is the author/funder, who has granted medRxiv a license to display the preprint in perpetuity. It is made available under a CC-BY 4.0 International license .

Abstract

Norovirus is one of the most common gastrointestinal pathogens and causes substantial morbidity and mortality worldwide. A serious consequence can be acute kidney injury (AKI), characterised by a rapid deterioration of kidney function. A quarter of all inpatients have AKI, which is associated with an increased risk of mortality. This study aimed to quantify the contribution of norovirus community transmission to AKI hospitalisations in England and its attributable cost.

We developed an age-structured deterministic compartmental dynamic transmission model for norovirus. We used a Bayesian approach to fit the model to multiple electronic health data sources, including hospitalisations and primary care records for AKI and gastroenteritis, as well as laboratory-confirmed norovirus surveillance data in England, from 2013-2019. We used Markov Chain Monte Carlo to estimate the effect of norovirus incidence on community-acquired AKI hospitalisations. We estimate 25.4% (95% CrI: 17.9-36.3%) of norovirus infections in people aged 65 years and above were linked to community-acquired AKI hospitalisations, amounting to 793,229 (95% CrI: 557,125-1,130,593) hospitalisations between 2013-2019. This represents 16.3% (95% CrI: 11.4-23.2%) of community acquired AKI hospitalisations in people aged 65 years and above over this period. The economic healthcare cost associated with norovirus-linked AKI admissions was estimated to be on average £343 million annually.

Gastroenteritis has previously been identified as an important risk factor for AKI in vulnerable patients. Our results suggest norovirus incidence in the community plays an important role in driving AKI hospitalisations in individuals aged 65 years and above. This is the first population-level estimate of the prevalence of norovirus infections linked to hospitalisations for AKI, and the comparable seasonal patterns between the two. This presents a substantial economic burden on the healthcare system and AKI hospitalisation should be an important consideration when evaluating future norovirus vaccines.

medRxiv preprint doi: https://doi.org/10.1101/2024.10.24.24316053; this version posted October 24, 2024. The copyright holder for this preprint (which was not certified by peer review) is the author/funder, who has granted medRxiv a license to display the preprint in perpetuity. It is made available under a CC-BY 4.0 International license .

Introduction

Norovirus is a viral gastrointestinal infection that is the most commonly reported cause of acute gastroenteritis in the UK, estimated to cause 3.7 million cases per year (1). While often self-limiting, with symptoms lasting 2-3 days, disease can be severe in children, the elderly, and people with impaired immune function (2). The majority of norovirus transmission is thought to occur as person-to-person transmission in the community with an important burden in settings such as schools, care homes, and hospitals (3). Norovirus has a low infectious dose and is a genetically diverse virus making control efforts challenging (2,4,5). In healthcare settings like hospitals, outbreaks of norovirus cause major disruptions due to prolonging admissions and the implementation of control measures reducing bed availability during peak winter months (3,6,7). Norovirus incidence demonstrates a clear seasonality with regular peaks in winter driven by a complex interplay between population immunity, environmental factors, and host-behavioural factors (8,9).

Through dehydration from vomiting and diarrhoea, a serious consequence of norovirus infection can be acute kidney injury (AKI). AKI is characterised by a rapid deterioration of kidney function undermining metabolic, electrolyte, and fluid homeostasis (10). In some settings, 20-25% of all patients admitted to hospital are diagnosed with AKI (10,11). It is associated with prolonged admissions and a 4-16-fold increase in the odds of death (11). In the UK, it is estimated that AKI inpatient care and longer term impacts cost £1.02 billion annually, equivalent to 1% of the NHS budget in 2011 (12). Associated risk factors for AKI include older age, chronic kidney disease, hypertension, diabetes, heart failure, drug toxicity, and infection (10). This diverse range of aetiologies poses challenges in targeting mechanisms to reduce the burden of AKI as a global public health issue.

Hospital admissions for AKI demonstrate a seasonal pattern with winter increases, suggesting infection as an important contributor of AKI burden (13–15), and a substantially increased risk after gastroenteritis compared to other infections (16). Therefore, we hypothesised that increases in gastrointestinal viruses, in particular norovirus, are a driver of AKI trends over time in the UK. Therefore, we sought to quantify the contribution of community norovirus to AKI hospitalisations, and its attributable cost. We fit a mathematical model of norovirus transmission to AKI hospitalisation data and use Bayesian inference to estimate the contribution. With a number of vaccine candidates for norovirus in development (17), this study presents new insights that will serve to illustrate further aspects on the potential benefits of introducing norovirus vaccination in England.

Methods

Transmission Model

To model norovirus transmission, we developed an adapted deterministic Susceptible (S), Exposed (E), Infected (I), Recovered (R) model from previously published studies (18–20). The

medRxiv preprint doi: https://doi.org/10.1101/2024.10.24.24316053; this version posted October 24, 2024. The copyright holder for this preprint (which was not certified by peer review) is the author/funder, who has granted medRxiv a license to display the preprint in perpetuity. It is made available under a CC-BY 4.0 International license .

model includes two infected compartments; symptomatic (I_s) and asymptomatic (I_a) (Figure 1). The model is age stratified into four age groups: 0-4; 5-14; 15-64; 65+ years. This age stratification is to reflect young children (0-4 years) having the highest estimated incidence of norovirus, and older adults (65+ years) who are most vulnerable to severe disease (1,19,20).

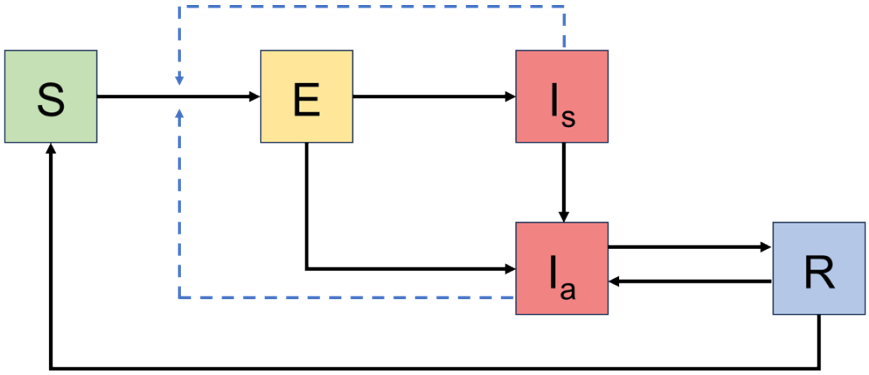

Figure 1: Compartmental model diagram with the following classes: S, susceptible; E, exposed; Ia, infectious asymptomatic; Is, infectious symptomatic; R, recovered. Arrows denote becoming infected, moving through the infection and recovery process, and waning of immunity. Force of infection is denoted by the dashed lines. Births, deaths, and ageing are included in the model but not depicted in the diagram.

Susceptible individuals are infected at rate λ into the Exposed compartment. Exposed individuals have an incubation period of μ then progress to be Infected-symptomatic (I_s) or Infected-asymptomatic (I_a). To capture heterogeneous and assortative contact patterns between age-groups, denoted c_{ij}, contact matrix data in the UK from the POLYMOD survey were extracted using the R package socialmixr (21,22). The proportion symptomatic is σ, and the proportion asymptomatic 1-σ. Symptomatic individuals progress into the asymptomatic compartment at a rate of ψ, representing the rate of loss of symptoms. Asymptomatic individuals then progress into the Recovered compartment at a rate of γ representing the rate of recovery.

In the recovered compartment, individuals are immune and then return to the Susceptible compartment at a rate of ω. However, to reflect that during the period of immunity, individuals can be re-infected but not have disease, the same force of infection applied to susceptible individuals was applied to the recovered compartment. The full model equations, details on the force of infection and seasonality are in Supplement S1.

Model fitting overview

We fit our model to various sources of data which include: UK Health Security Agency's Second Generation Surveillance System (SGSS), the second longitudinal study of infectious intestinal diseases in the UK (IID2), the Clinical Practice Research Datalink (CPRD) Aurum, and Hospital Episode Statistics (HES). Information about each data source is outlined in Supplement S2. Use of CPRD/HES was approved in 2023 (protocol 23_003034).

medRxiv preprint doi: https://doi.org/10.1101/2024.10.24.24316053; this version posted October 24, 2024. The copyright holder for this preprint (which was not certified by peer review) is the author/funder, who has granted medRxiv a license to display the preprint in perpetuity. It is made available under a CC-BY 4.0 International license .

We operate under the assumption that each source represents distinct segments of the surveillance pyramid and as a result, capture different norovirus dynamics across the age groups (Figure 2). For example, norovirus dynamics are more likely to be captured in GP data in younger age groups; whereas in older age groups norovirus dynamics are more likely captured in hospitalisation data. This assumption therefore underpins our fitting approach: in age groups 0-4 and 5-14, we fit our model to medically attended gastroenteritis captured by primary care data. In the 65+ age group we fit to gastroenteritis and acute kidney injury hospitalisation data. In the 15-64 age group, norovirus dynamics are poorly captured in GP and hospitalisation data, therefore we did not fit to either sources. All age groups were fitted to the surveillance data and community incidence estimates generated by IID2 (23).

We defined a GP attendance for gastroenteritis where there was a recorded pathogen code (positive test for norovirus) or a diagnosis code (e.g. gastroenteritis) (Supplement S7.3). Symptom codes (e.g. diarrhoea and vomiting only) were not included as they were non-specific.

We defined community-acquired hospitalisations as an AKI code recorded in any position (primary, secondary, tertiary, etc.) in an episode within three days of admission, and refer to this definition as ‘AKI hospitalisation’ subsequently. We defined gastroenteritis hospitalisation as a relevant ICD-10 code in any position in HES, at any time during an admission.

We fit the model to data between 2013-2019, in order to target a period after the introduction of the rotavirus vaccine in order to minimise the contribution of a major causative agent for gastroenteritis. Similarly, we end the observation period in 2019 in order to exclude the period of the COVID-19 pandemic, where norovirus dynamics were disrupted and SARS-CoV-2 was a major causative agent for AKI during that period.

medRxiv preprint doi: https://doi.org/10.1101/2024.10.24.24316053; this version posted October 24, 2024. The copyright holder for this preprint (which was not certified by peer review) is the author/funder, who has granted medRxiv a license to display the preprint in perpetuity. It is made available under a CC-BY 4.0 International license .

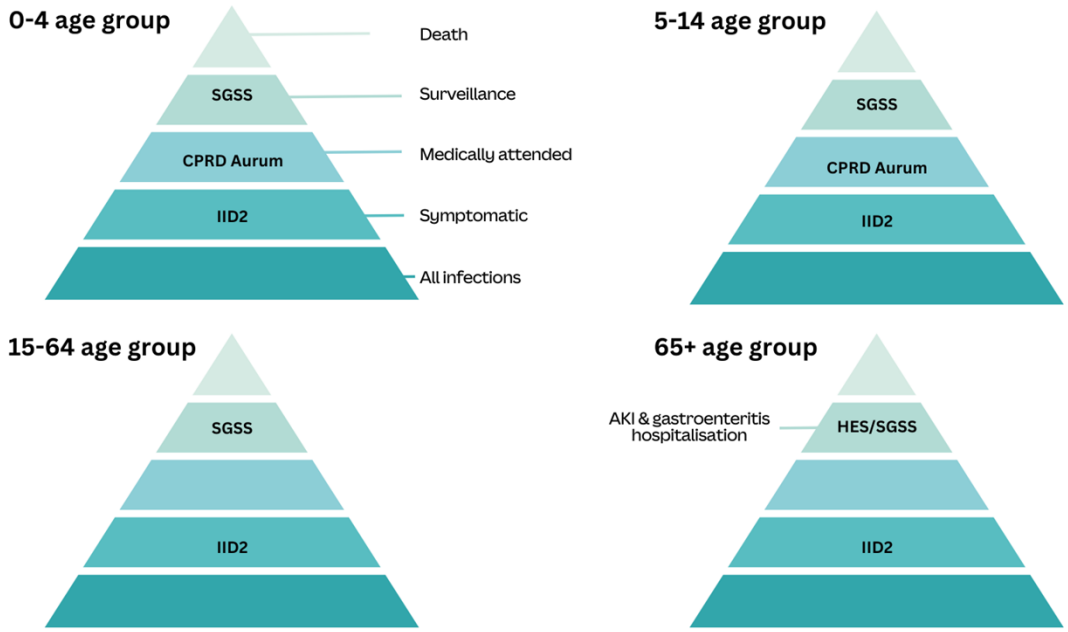

Figure 2: Schematic of the surveillance pyramid stratified by age. Each source of data captures different segments of the pyramid. We assumed that norovirus dynamics vary across age groups, meaning certain data sources more accurately reflect these dynamics in specific age groups. Within each age group, we label the data source used to fit the model. SGSS, Second Generation Surveillance System; CPRD Aurum, Clinical Practice Research Datalink Aurum; IID2, Longitudinal study of infectious intestinal disease in the UK; HES, Hospital Episode Statistics.

Observation model

Observation model for GP attendance

We developed an observation model to link the modelled incidence of norovirus infections to GP attendances for gastroenteritis in age groups 0-4 and 5-14. In order to capture secular trends in the data parsimoniously, we applied a B-spline function with three knots to the modelled incidence data. The output is multiplied by a parameter to scale the modelled output to observed data of GP attendance for all-cause gastroenteritis.

Observation model for hospitalisations

We developed an observation model to link the modelled incidence of norovirus infections to hospitalisations with gastroenteritis and AKI, in people 65 years old and above. Unlike the GP attendance model, this approach assumes that the seasonal patterns in AKI data are partly due to norovirus. We estimate a key parameter of the proportion of norovirus infections linked to AKI

medRxiv preprint doi: https://doi.org/10.1101/2024.10.24.24316053; this version posted October 24, 2024. The copyright holder for this preprint (which was not certified by peer review) is the author/funder, who has granted medRxiv a license to display the preprint in perpetuity. It is made available under a CC-BY 4.0 International license .

hospitalisations, which scales the amplitude of the observation model to fit the observed AKI data. Through Bayesian inference, we estimate the parameter value that best matches the observed AKI seasonality. To account for other AKI causes, we add the sinusoidal changes in norovirus linked AKI hospitalisation data to a cubic spline representing long-term trends. A step-by-step explanation is outlined in Supplement S3.

Bayesian inference

We fitted the model to the different datasets and age groups using a Poisson likelihood. The log likelihood of each data source was added together to give an overall log likelihood (Supplement S3.4). To estimate the posterior distribution of the parameters giving the best fit between the model and the different data sources, we used an adaptive Markov Chain Monte Carlo (MCMC) with the Metropolis-Hastings algorithm. We run five chains of 500,000 iterations, discarding the first 50,000 to have a more representative distribution of the posteriors being estimated (burn in). We also thinned the chain by 50 in order to reduce autocorrelation in the samples (thinning).

In the AKI hospitalisation data, there were periods of increased hospitalisations in summer months strongly associated with heat waves. Therefore, we collected data from the UK meteorological office on time periods where heat waves were declared. We excluded AKI hospitalisation data as part of the likelihood calculation during these weeks in order to minimise spuriously fitting parameters to data unlikely associated with norovirus dynamics.

Cost analysis

To estimate the economic cost of norovirus linked AKI hospitalisations we collated the reference costs for acute kidney injury (LA07) reported by the National Health Service between 2013-2019 (24,25). Costs associated with AKI vary by whether an intervention was made and the complication and comorbidity score, therefore we used the mean activity weighted reference cost for each year. The mean reference cost was multiplied by the estimated number of AKI admissions linked to norovirus and a range of costs from the posterior distribution of the fitted parameter. We assume a variable cost of 15%, meaning the cost saved if the norovirus attributable AKI hospitalisation was prevented during this period (26). All costs were inflated to 2021 using the NHS cost inflation index (27).

Sensitivity analysis

To examine the robustness of our results we conducted a number of sensitivity analyses. First, we fit the proposed model to include a broader definition of AKI hospitalisation. We also fit the model to AKI hospitalisation data including the periods associated with heatwaves.

Software

We carried out the analysis using R version 4.4. We developed an R package called *noromod* (https://github.com/pratikunterwegs/noromod) to execute the compartmental dynamic

medRxiv preprint doi: https://doi.org/10.1101/2024.10.24.24316053; this version posted October 24, 2024. The copyright holder for this preprint (which was not certified by peer review) is the author/funder, who has granted medRxiv a license to display the preprint in perpetuity. It is made available under a CC-BY 4.0 International license .

transmission model of norovirus. Model fitting and analysis code are available at: https://github.com/ehr-lshtm/acute_kidney_injury_norovirus_transmission_model.

Results

Descriptive analysis

Across six seasons (June to July) between 2013 and 2019, incidence of AKI hospitalisation in 65+ years old was 80 per 100,000 person years at the beginning of 2013 and rising year on year to 131 per 100,000 person years at the end of 2019 (Supplement S4). We observed distinct winter seasonal increases in AKI hospitalisation consistently peaking between week 52 and week 1. Norovirus surveillance peaks varied each between week 2 and 13. In the 2016/2017 season a peak was observed in week 47. GP attendance in children 0-4 and 5-14 for gastroenteritis typically showed double peaks, with acute drops in attendance data in week 52; typically a period defined by bank holidays and school closures in England. GP attendances for gastroenteritis nearly double each winter compared to summer incidence. Gastroenteritis hospitalisation showed a much less pronounced winter seasonal peak compared to other sources of data. Peaks in gastroenteritis hospitalisation also occurred between week 2 and 13 of each season.

Model fit and parameter estimates

In general, our model fits each source of data adequately (Figure 1 and Figure 2). For the norovirus surveillance data, generally across the age groups the height and timing of the peaks and troughs were captured (Figure 1). The amplitude of seasonality was captured less well in the over 65-year-old surveillance data. For GP attendance for gastroenteritis and gastroenteritis hospitalisation, peaks and troughs were captured by the model (Figure 2). The fit to AKI hospitalisations captured troughs adequately, but the height and timing of the peaks were captured less well (Figure 2 panel D). Compared to IID2 incidence rate data, our model reported estimates within the bounds of the IID2 study estimates, except for the under 5 incidence, where we underestimate incidence (Supplement S5.1).

The posterior for the probability of transmission between under five-year-olds was 0.19 (95% CrI: 0.18-0.22) and for the probability of transmission to (and between) over five years olds was 0.04 (95% CrI: 0.037-0.048) (Table 1). Duration of immunity was estimated to be 9.0 years (95% CrI: 8.3-9.8). To fit the observed hospitalisations and surveillance data, we estimated that approximately 1 in 15 over 65-year-olds with symptomatic norovirus infection were hospitalised, and 1 in 112 were reported to surveillance. When fitting the model to AKI hospitalisation data, we estimated that the proportion of symptomatic norovirus infections linked to an AKI hospitalisation was 0.25 (95% CrI: 0.18-0.36).

medRxiv preprint doi: https://doi.org/10.1101/2024.10.24.24316053; this version posted October 24, 2024. The copyright holder for this preprint (which was not certified by peer review) is the author/funder, who has granted medRxiv a license to display the preprint in perpetuity. It is made available under a CC-BY 4.0 International license .

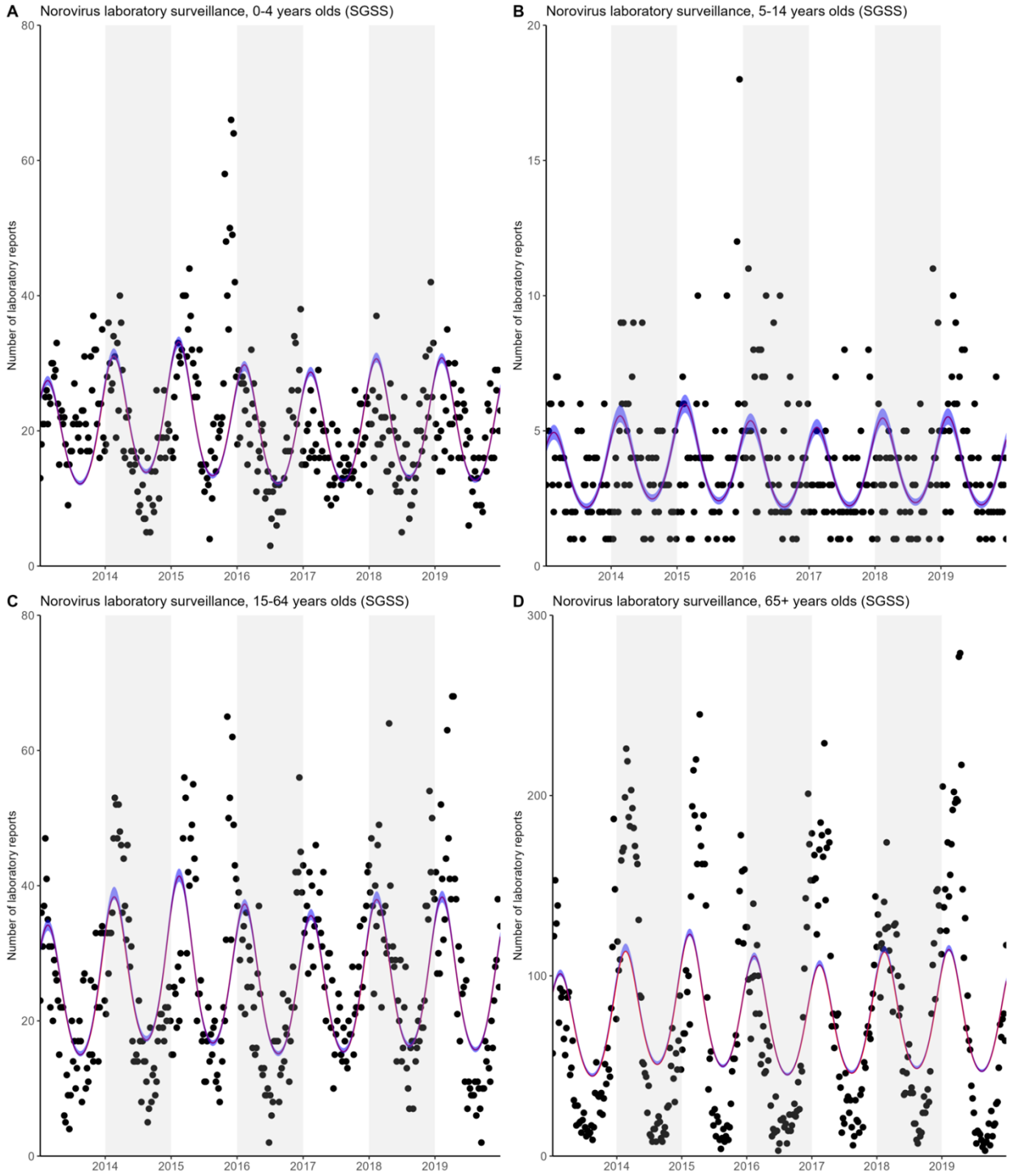

Figure 2: Model fit to norovirus surveillance data (SGSS), 2013-2019 stratified by age A) 0-4 years olds B) 5–14-year-olds C) 15-64 year olds D) 65+ year olds

medRxiv preprint doi: https://doi.org/10.1101/2024.10.24.24316053; this version posted October 24, 2024. The copyright holder for this preprint (which was not certified by peer review) is the author/funder, who has granted medRxiv a license to display the preprint in perpetuity. It is made available under a CC-BY 4.0 International license .

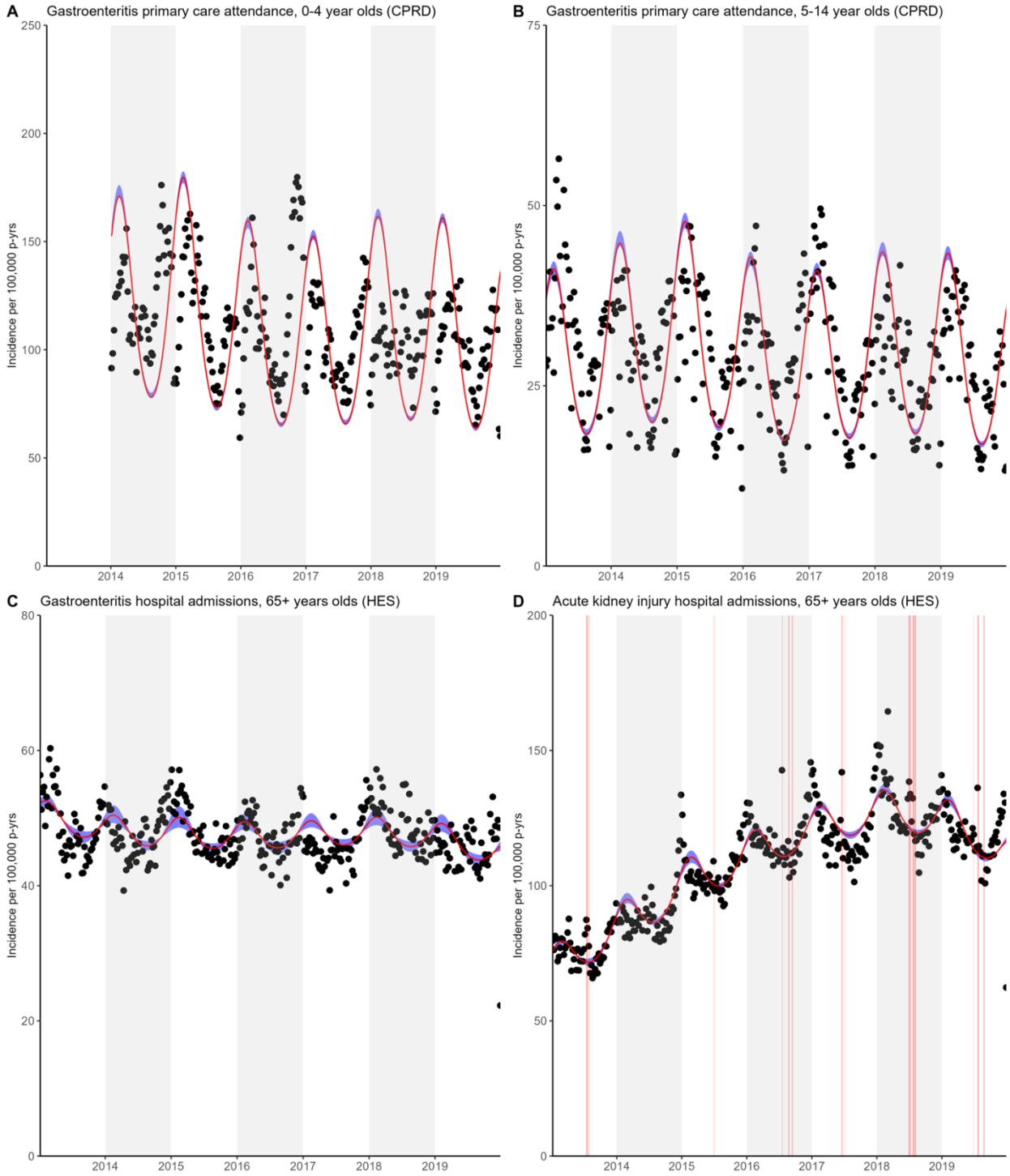

Figure 3: Model fit to various data sources, 2013-2019 A) gastroenteritis primary care attendance, 0–4-year-olds (CPRD) B) gastroenteritis primary care attendance, 5-14 year olds (CPRD) C) gastroenteritis hospital admission, 65+ year olds (HES) D) acute kidney injury hospital admission, 65+ year olds (HES). Red shaded area in panel D denotes AKI hospitalisations not included in likelihood calculation as periods of AKI related to heat waves. Grey shaded area represent alternating calendar years to aid in visualising

medRxiv preprint doi: https://doi.org/10.1101/2024.10.24.24316053; this version posted October 24, 2024. The copyright holder for this preprint (which was not certified by peer review) is the author/funder, who has granted medRxiv a license to display the preprint in perpetuity. It is made available under a CC-BY 4.0 International license .

peak timings. In the 0–4-year-old gastroenteritis primary care data (Panel A), we excluded data from the year 2013, as rotavirus vaccination had been introduced in the summer of 2013. Therefore, to improve the specificity of the gastroenteritis attendances for norovirus, years where rotavirus were significantly more active were excluded.

Parameter	Median (95% CrI)	Explanation
Proportion symptomatic	0.827 (0.691-0.896)	Proportion of individuals symptomatic
Duration of immunity	9.01 (8.28-9.75)	Number of years individual is immune
Probability of infection between under 5s	0.192 (0.179-0.216)	Probability of transmission in under 5s transmitting to under 5s
Probability of infection to over 5s	0.0401 (0.0365-0.0478)	Probability of transmission transmitting to over 5s
Seasonal amplitude term	0.0385 (0.0371-0.041)	A term forcing the amplitude of the periodicity in the contact rate
Scaling seasonal amplitude for over 65	1.59 (1.18-2.18)	Scaling seasonal amplitude for over 65 seasonality to improve fit
Seasonal offset term	0.0837 (0.0634-0.105)	A term forcing the timing of the periodicity in the contact rate
Norovirus associated AKI hospitalisation in 65+	0.254 (0.179-0.363)	Proportion of symptomatic norovirus infections linked to an AKI hospitalisation in over 65s
Norovirus associated hospitalisation in 65+	0.0685 (0.033-0.114)	Proportion of symptomatic norovirus infections linked to a gastroenteritis hospitalisation in over 65s
Underreporting to surveillance 0-4	0.00192 (0.00181-0.00212)	Proportion of symptomatic norovirus in 0-4 year olds reported to surveillance
Underreporting to surveillance 5-14	0.000466 (0.000421-0.000517)	Proportion of symptomatic norovirus in 5-14 year olds reported to surveillance
Underreporting to surveillance 15-64	0.000775 (0.000717-0.000841)	Proportion of symptomatic norovirus in 15-64 year olds reported to surveillance
Underreporting to surveillance 65+	0.00892 (0.00674-0.0119)	Proportion of symptomatic norovirus in over 65s reported to surveillance
GP attendance for all cause gastroenteritis in under 5s	0.393 (0.374-0.434)	Reporting parameter linking symptomatic norovirus infection in under 5s to all cause gastroenteritis diagnosed in primary care
GP attendance for all cause gastroenteritis in 5-14s	0.301 (0.276-0.331)	Reporting parameter linking symptomatic norovirus infection in 5-14s to all cause gastroenteritis diagnosed in primary care

Table 1: Parameters and posterior estimates

Estimate of norovirus leading to acute kidney injury hospitalisations

Between 2013 and 2019, we estimate from our norovirus model that there were 3,117,707 (95% CrI: 2,356,661 - 4,174,546) infections in people aged 65 years and above. Based on the posterior estimate, 25.4% (95% CrI: 17.9-36.3%) were linked to an AKI hospitalisation. This would amount to 793,229 (95% CrI: 557,125-1,130,593) norovirus linked AKI hospitalisations. There were 4,874,534 AKI hospitalisations that meet the definition of community acquired. Given this, we estimate that 16.3% (95% CrI: 11.4-23.2%) of community acquired AKI hospitalisations in people aged 65 years and above could be attributable to norovirus infection in 2013-2019.

Economic cost analysis

We estimate that between 2013-2019, between £314 - £366 million per year was associated with norovirus linked AKI hospitalisations.

medRxiv preprint doi: https://doi.org/10.1101/2024.10.24.24316053; this version posted October 24, 2024. The copyright holder for this preprint (which was not certified by peer review) is the author/funder, who has granted medRxiv a license to display the preprint in perpetuity. It is made available under a CC-BY 4.0 International license .

This amounts to £2.4 billion (CrI: £1.7 - £3.4 billion) during the observation period. Assuming the 15% variable cost, preventing norovirus in people aged 65 years and above and thus AKI hospitalisation would amount to £361 million (CrI: £254-£515 million) savings between 2013-2019.

Year	Number of norovirus infections (thousands)	Number of AKI hospitalisations linked (thousands)	Mean activity weighted reference cost (£)	Annual total cost inflation adjusted (millions)
2013	412	105 (74-149)	2,600	£314 (£221-£447)
2014	466	119 (83-169)	2,690	£361 (£254-£514)
2015	474	120 (85-172)	2,700	£366 (£257-£521)
2016	430	109 (77-156)	2,610	£317 (£222-£452)
2017	439	112 (78-159)	2,660	£330 (£232-£470)
2018	453	115 (81-164)	2,830	£353 (£249-£505)
2019	445	113 (79-161)	3,000	£366 (£257-£521)
Total	3,118	793 (557-1,131)		£2,407 (£1,692-£3,430)

Table 2: Estimated annual costs associated with norovirus linked acute kidney injury hospitalisations. Cost values inflated to 2021 using the NHS cost inflation index (27)

Sensitivity analysis

Broadening the definition of AKI did not change the posterior parameter estimates. Given that our definition of community acquired AKI represents greater than 95% of AKI codes recorded, we would expect our results to be robust. Furthermore, including hospitalisation counts strongly associated with heat waves also did not change the posterior parameter estimates. While the likelihood is increased, these only represent 20 weeks out of 365 weeks of data fitted to, therefore we would expect posterior parameter estimates to be unchanged.

Discussion

We developed a model of norovirus transmission in the community fitted to AKI data to estimate the percentage of infections associated with community acquired AKI hospitalisation. We estimate one in four norovirus infections can be linked to an AKI hospitalisation in the elderly, amounting to 793,229 hospitalisations between 2013-2019 that represent costs to the NHS of £343 million annually.

Results in context

Literature on quantitative estimates of norovirus infections linked to AKI are limited. This is because gastroenterological symptoms may have resolved by the time of hospital admission leading to historical under recognition of this association through limited virological confirmation and under ascertainment in hospital coding. Given this, most studies explore associations between gastroenteritis and AKI. The prevalence of AKI among children in Uganda hospitalised

medRxiv preprint doi: https://doi.org/10.1101/2024.10.24.24316053; this version posted October 24, 2024. The copyright holder for this preprint (which was not certified by peer review) is the author/funder, who has granted medRxiv a license to display the preprint in perpetuity. It is made available under a CC-BY 4.0 International license .

with gastroenteritis was 28%, (28) while conversely among people of all ages admitted with AKI in Malawi 19.6% had gastroenteritis (29). A large Japanese study using routine data to investigate the seasonality of AKI hospitalisations found that gastroenteritis was the third most common diagnosis code on admission (12.8%) (14). Because our focus lies on estimating the population-level contribution of norovirus to AKI hospitalisations, these studies are limited in serving as comparators for our study's estimates. However, a self-controlled case series analysis of patients taking anti-hypertensive drugs found that individuals were 43 times more likely to experience an AKI admission following an episode of gastroenteritis than pre-infection, substantially greater than with pneumonia or urinary tract infections. Given this high risk observed in vulnerable individuals, our findings of a high proportion of norovirus linked AKI hospitalisations among older adults are consistent in this context.

Explanations and implications

Our observation model suggests that norovirus plays an important role in the seasonality observed in community acquired AKI hospitalisations. However, given the multifactorial nature of AKI, other mechanisms not captured by the model are likely to play a role and may contribute to the misalignment in the timing of norovirus peaks and that of AKI hospitalisations. Both other infections and important AKI-associated comorbidities such as heart failure and myocardial infarction also demonstrate seasonal associations (30–32). Detection of AKI may also vary seasonally, which may be a plausible explanation of the consistent timing of the peaks of AKI admissions.

Our estimate that 25% of norovirus infections are linked to an AKI hospitalisation in people over 65 shows the very substantial burden this infection places on health services. Norovirus outbreak control efforts significantly contribute to winter pressures, and prolonged admissions due to AKI further increases the burden on hospitals. The norovirus vaccine, which will be available shortly, offers a potentially important mechanism through which to reduce the burden of AKI hospitalisations, particularly in those at high risk such as the frail elderly, immunosuppressed and those with chronic kidney disease. The healthcare costs associated with AKI should also be an important consideration in the cost effectiveness analysis of a norovirus vaccine. Previous estimates of the economic cost of norovirus on the NHS was nearly £300 million annually, including foregone admissions (6). When considering the cost of norovirus linked AKI hospitalisations, the economic burden of norovirus on the healthcare system would be doubled.

Strengths and weaknesses

We have used several sources of robust large-scale national data to provide the first demonstration of the comparable seasonal patterns between AKI hospitalisations and norovirus incidence and modelled an estimate of the public health burden of this association. This estimate is important because of the challenges in having real world estimates, due to limited virological confirmation of norovirus and under ascertainment in hospital coding.

medRxiv preprint doi: https://doi.org/10.1101/2024.10.24.24316053; this version posted October 24, 2024. The copyright holder for this preprint (which was not certified by peer review) is the author/funder, who has granted medRxiv a license to display the preprint in perpetuity. It is made available under a CC-BY 4.0 International license .

The accuracy of estimating norovirus-associated AKI hospitalisations relies on the reliability of the norovirus model capturing dynamics appropriately. We estimated that the duration of immunity was 9 years, which is comparable to previous estimates (18,19). We estimated the probability of infection to be 0.19 per contact between under 5s, and 0.04 per contact with over 5s, both within the bounds of previous estimates (19,33). The rate of hospitalisation from norovirus in the over 65s was higher than previous estimates (34). We estimated that 6.8% (95% CrI: 3.3-11.0%) of gastroenteritis admissions in the elderly were attributable to norovirus, while previous estimates were <1% in the elderly. Differences can be explained by differing periods of observation, outcomes, and statistical approaches. We estimated a surveillance reporting ratio higher than that reported in the IID2 study. However we estimated a ratio of samples in 65+ year olds, where one would expect more to be reported to surveillance, compared to the all age group estimate reported in IID2.

While the fitted parameters align with previously reported estimates and our model shows strong quantitative evidence of fitting the data, several key assumptions underpin the approach. Firstly, we use a seasonal forcing term, which assumes that norovirus seasonality is driven by increased contacts during specific times of the year and that seasonal peaks occur consistently each year. Although this term was estimated during the fitting process and includes uncertainty, it oversimplifies the more nuanced mechanisms that may cause year-to-year variations in peak timing, as observed in surveillance data. Despite many factors influencing norovirus and AKI seasonality, the seasonal forcing term is an effective approach to summarising these patterns without adding unnecessary complexity or minimising overfitting. Previous studies have identified temperature as a driver of norovirus seasonality, suggesting it could be incorporated in future model iterations to better account for year-to-year variations.

The limited data on norovirus incidence over time makes modelling community transmission essential for estimating its incidence. To enhance our approach and better capture transmission dynamics, we fit the model using multiple data sources, although these sources often involve non-specific diagnoses. With the hospitalisation data, we assume a proportion is attributable to norovirus, acknowledging that our observation model may oversimplify accounting for other causes of non-specific outcomes like AKI and gastroenteritis, as well as their seasonality. Additionally, the degree to which our estimates of norovirus-linked AKI hospitalisations are truly causal remains uncertain. While AKI aetiology is complex and multifactorial, our observation model assumes a plausible causal mechanism through volume depletion.

Although our model shows a strong fit with the data both qualitatively and quantitatively, it does not account for strain-specific dynamics. This limitation could affect factors like the duration of immunity, the likelihood of symptomatic infection upon reinfection, and the probability of infection. However, the study period from 2013 to 2019 was marked by stability in strain dynamics, with the GII.4 Sydney strain being the dominant capsid type in England and globally (35). Strain dynamics may become more significant in future model iterations, especially when considering vaccination scenarios. This is also highlighted by the newly increased circulation of GII.17 during the 2023-2024 season, without observed changes in the epidemiological burden (36).

medRxiv preprint doi: https://doi.org/10.1101/2024.10.24.24316053; this version posted October 24, 2024. The copyright holder for this preprint (which was not certified by peer review) is the author/funder, who has granted medRxiv a license to display the preprint in perpetuity. It is made available under a CC-BY 4.0 International license .

Conclusion

We demonstrate that norovirus incidence in the community plays an important role in driving AKI hospitalisations and presents a large economic burden on the English healthcare system. AKI hospitalisation should be an important consideration when evaluating future norovirus vaccines.

medRxiv preprint doi: https://doi.org/10.1101/2024.10.24.24316053; this version posted October 24, 2024. The copyright holder for this preprint (which was not certified by peer review) is the author/funder, who has granted medRxiv a license to display the preprint in perpetuity. It is made available under a CC-BY 4.0 International license .

Acknowledgements

We would like to acknowledge the funding support from the National Institute for Health and Care Research (NIHR) Health Protection Research Unit (HPRU) in Modelling and Health Economics, a partnership between UK Health Security Agency (UKHSA), Imperial College London, and London School of Hygiene and Tropical Medicine. The views expressed in the study are those of the authors and not necessarily those of the National Health Service, NIHR, UK Department of Health or UKHSA. The views and opinions expressed herein are the authors' own and do not necessarily state or reflect those of Robert Koch Institute (RKI). We would also like to acknowledge Lesley Larkin, Kathleen O'Reilly, Juan Vesga, Dorothea Nitsch, and Viyaasan Mahalingasivam for their invaluable advice.

medRxiv preprint doi: https://doi.org/10.1101/2024.10.24.24316053; this version posted October 24, 2024. The copyright holder for this preprint (which was not certified by peer review) is the author/funder, who has granted medRxiv a license to display the preprint in perpetuity. It is made available under a CC-BY 4.0 International license .

References

1. Harris JP, Iturriza-Gomara M, O'Brien SJ. Re-assessing the total burden of norovirus circulating in the United Kingdom population. Vaccine. 2017 Feb;35(6):853–5.
2. De Graaf M, Van Beek J, Koopmans MPG. Human norovirus transmission and evolution in a changing world. Nat Rev Microbiol. 2016 Jul;14(7):421–33.
3. Koopmans M. Noroviruses in healthcare settings: a challenging problem. J Hosp Infect. 2009 Dec;73(4):331–7.
4. Glass RI, Parashar UD, Estes MK. Norovirus Gastroenteritis. N Engl J Med. 2009 Oct 29;361(18):1776–85.
5. Hall AJ. Noroviruses: The Perfect Human Pathogens? J Infect Dis. 2012 Jun 1;205(11):1622–4.
6. Sandmann FG, Shallcross L, Adams N, Allen DJ, Coen PG, Jeanes A, et al. Estimating the Hospital Burden of Norovirus-Associated Gastroenteritis in England and Its Opportunity Costs for Nonadmitted Patients. Clin Infect Dis. 2018 Aug 16;67(5):693–700.
7. Lopman BA, Reacher MH, Vipond IB, Hill D, Perry C, Halladay T, et al. Epidemiology and Cost of Nosocomial Gastroenteritis, Avon, England, 2002–2003. Emerg Infect Dis. 2004 Oct;10(10):1827–34.
8. Rohayem J. Norovirus seasonality and the potential impact of climate change. Clin Microbiol Infect. 2009 Jun;15(6):524–7.
9. Lopman B, Armstrong B, Atchison C, Gray JJ. Host, Weather and Virological Factors Drive Norovirus Epidemiology: Time-Series Analysis of Laboratory Surveillance Data in England and Wales. Pybus OG, editor. PLoS ONE. 2009 Aug 24;4(8):e6671.
10. Rewa O, Bagshaw SM. Acute kidney injury—epidemiology, outcomes and economics. Nat Rev Nephrol. 2014 Apr;10(4):193–207.
11. Wang HE, Muntner P, Chertow GM, Warnock DG. Acute Kidney Injury and Mortality in Hospitalized Patients. Am J Nephrol. 2012;35(4):349–55.
12. Kerr M, Bedford M, Matthews B, O'Donoghue D. The economic impact of acute kidney injury in England. Nephrol Dial Transplant. 2014 Jul 1;29(7):1362–8.
13. Bolt H, Suffel A, Matthewman J, Sandmann F, Tomlinson L, Eggo R. Seasonality of acute kidney injury phenotypes in England: an unsupervised machine learning classification study of electronic health records. BMC Nephrol. 2023 Aug 9;24(1):234.
14. Iwagami M, Moriya H, Doi K, Yasunaga H, Isshiki R, Sato I, et al. Seasonality of acute kidney injury incidence and mortality among hospitalized patients. Nephrol Dial Transplant. 2018 Aug 1;33(8):1354–62.
15. Phillips D, Young O, Holmes J, Allen LA, Roberts G, Geen J, et al. Seasonal pattern of incidence and outcome of Acute Kidney Injury: A national study of Welsh AKI electronic alerts. Int J Clin Pract. 2017;71(9):e13000.
16. Mansfield KE, Douglas IJ, Nitsch D, Thomas SL, Smeeth L, Tomlinson LA. Acute kidney injury and infections in patients taking antihypertensive drugs: a self-controlled case series analysis. Clin Epidemiol. 2018;10:187–202.
17. Lucero Y, Vidal R, O'Ryan G M. Norovirus vaccines under development. Vaccine. 2018 Aug;36(36):5435–41.
18. Gaythorpe KAM, Trotter CL, Conlan AJK. Modelling norovirus transmission and vaccination. Vaccine. 2018 Sep;36(37):5565–71.
19. Simmons K, Gambhir M, Leon J, Lopman B. Duration of Immunity to Norovirus Gastroenteritis. Emerg Infect Dis. 2013 Aug;19(8):1260–7.
20. Steele MK, Remais JV, Gambhir M, Glasser JW, Handel A, Parashar UD, et al. Targeting pediatric versus elderly populations for norovirus vaccines: a model-based analysis of mass vaccination options. Epidemics. 2016 Dec;17:42–9.

medRxiv preprint doi: https://doi.org/10.1101/2024.10.24.24316053; this version posted October 24, 2024. The copyright holder for this preprint (which was not certified by peer review) is the author/funder, who has granted medRxiv a license to display the preprint in perpetuity. It is made available under a CC-BY 4.0 International license .

21. Mossong J, Hens N, Jit M, Beutels P, Auranen K, Mikolajczyk R, et al. Social Contacts and Mixing Patterns Relevant to the Spread of Infectious Diseases. Riley S, editor. PLoS Med. 2008 Mar 25;5(3):e74.
22. Funk S. socialmixr: Social Mixing Matrices for Infectious Disease Modelling.; [Internet]. 2018. Available from: https://cran.r-project.org/web/packages/socialmixr/index.html
23. Tam CC, Rodrigues LC, Viviani L, Dodds JP, Evans MR, Hunter PR, et al. Longitudinal study of infectious intestinal disease in the UK (IID2 study): incidence in the community and presenting to general practice. Gut. 2012 Jan;61(1):69–77.
24. Department of Health and Social Care. NHS reference costs [Internet]. Available from: https://www.gov.uk/government/collections/nhs-reference-costs
25. NHS England and NHS Improvement. National Cost Collection for the NHS [Internet]. Available from: https://www.england.nhs.uk/costing-in-the-nhs/national-cost-collection/
26. Roberts RR. Distribution of Variable vs Fixed Costs of Hospital Care. JAMA. 1999 Feb 17;281(7):644.
27. Jones KC, Burns A. Unit Costs of Health and Social Care 2021 [Internet]. Personal Social Services Research Unit; 2021 [cited 2024 Aug 29]. Available from: https://kar.kent.ac.uk/id/eprint/92342
28. Imani PD, Odiit A, Hingorani SR, Weiss NS, Eddy AA. Acute kidney injury and its association with in-hospital mortality among children with acute infections. Pediatr Nephrol. 2013 Nov;28(11):2199–206.
29. Evans R, Hemmilä U, Craik A, Mtekateka M, Hamilton F, Kawale Z, et al. TO021PREVALENCE, AETIOLOGY AND OUTCOME FROM COMMUNITY ACQUIRED ACUTE KIDNEY INJURY (AKI) IN SUB-SAHARA AFRICA: RESULTS OF THE MALAWI AKI STUDY (MAKIST). Nephrol Dial Transplant. 2016 May;31(suppl_1):i70–i70.
30. Stewart S, McIntyre K, Capewell S, McMurray JJV. Heart failure in a cold climate. J Am Coll Cardiol. 2002 Mar;39(5):760–6.
31. Yamamoto Y, Shirakabe A, Hata N, Kobayashi N, Shinada T, Tomita K, et al. Seasonal variation in patients with acute heart failure: prognostic impact of admission in the summer. Heart Vessels. 2015 Mar;30(2):193–203.
32. Arntz H. Diurnal, weekly and seasonal variation of sudden death. Population-based analysis of 24061 consecutive cases. Eur Heart J. 2000 Feb 15;21(4):315–20.
33. O'Reilly KM, Sandman F, Allen D, Jarvis CI, Gimma A, Douglas A, et al. Predicted norovirus resurgence in 2021–2022 due to the relaxation of nonpharmaceutical interventions associated with COVID-19 restrictions in England: a mathematical modeling study. BMC Med. 2021 Dec;19(1):299.
34. Verstraeten T, Jiang B, Weil JG, Lin JH. Modelling Estimates of Norovirus Disease in Patients with Chronic Medical Conditions. PLOS ONE. 2016 Jul 20;11(7):e0158822.
35. Public Health England. PHE National norovirus and rotavirus Report 09 April 2020 – Week 15 report (data to week 13) [Internet]. Available from: https://www.gov.uk/government/statistics/norovirus-and-rotavirus-summary-of-surveillance-2019-to-2020
36. Chhabra P, Wong S, Niendorf S, Lederer I, Vennema H, Faber M, et al. Increased circulation of GII.17 noroviruses, six European countries and the United States, 2023 to 2024. Eurosurveillance [Internet]. 2024 Sep 26 [cited 2024 Sep 30];29(39). Available from: https://www.eurosurveillance.org/content/10.2807/1560-7917.ES.2024.29.39.2400625