Development and Multinational Validation of an Ensemble Deep Learning Algorithm for Detecting and Predicting Structural Heart Disease Using Noisy Single-lead Electrocardiograms

Arya Aminorroaya MD, MPH[1], Lovedeep S Dhingra MBBS[1], Aline Pedroso Camargos PhD[1], Sumukh Vasisht Shankar MS[1], Andreas Coppi PhD[2], Akshay Khunte BS[1,3], Murilo Foppa MD, PhD[4,5], Luisa CC Brant MD, PhD[6,7], Sandhi M Barreto MD, PhD[8], Antonio Luiz P Ribeiro MD, PhD[6,7], Harlan M Krumholz MD, SM[1,2,9], Evangelos K Oikonomou MD, DPhil[1], Rohan Khera MD, MS[1,2,10,11*]

[1]Section of Cardiovascular Medicine, Department of Internal Medicine, Yale School of Medicine, New Haven, CT, USA
[2]Center for Outcomes Research and Evaluation (CORE), Yale New Haven Hospital, New Haven, CT, USA,
[3]NYU Grossman School of Medicine, New York, NY, USA
[4]Postgraduate Program in Cardiology, School of Medicine, Universidade Federal do Rio Grande do Sul., Porto Alegre, Brazil
[5]Division of Cardiology, Hospital de Clinicas de Porto Alegre, Porto Alegre, Brazil
[6]Department of Internal Medicine, Faculdade de Medicina, Universidade Federal de Minas Gerais, Belo Horizonte, Brazil
[7]Telehealth Center and Cardiology Service, Hospital das Clínicas, Universidade Federal de Minas Gerais, Belo Horizonte, Brazil
[8]Department of Preventive Medicine, School of Medicine, Faculdade de Medicina, Universidade Federal de Minas Gerais, Belo Horizonte, Brazil
[9]Department of Health Policy and Management, Yale School of Public Health, New Haven, CT, USA
[10]Section of Biomedical Informatics and Data Science, Yale School of Medicine, New Haven, CT, USA
[11]Section of Health Informatics, Department of Biostatistics, Yale School of Public Health, New Haven, CT, USA

Correspondence to:
Rohan Khera, MD, MS
195 Church Street, 6th Floor, New Haven, CT 06510
203-764-5885; rohan.khera@yale.edu; @rohan_khera

Word Count: 3,759

ABSTRACT

Background and Aims: AI-enhanced 12-lead ECG can detect a range of structural heart diseases (SHDs) but has a limited role in community-based screening. We developed and externally validated a noise-resilient single-lead AI-ECG algorithm that can detect SHD and predict the risk of their development using wearable/portable devices.

Methods: Using 266,740 ECGs from 99,205 patients with paired echocardiographic data at Yale New Haven Hospital, we developed ADAPT-HEART, a noise-resilient, deep-learning algorithm, to detect SHD using lead I ECG. SHD was defined as a composite of LVEF<40%, moderate or severe left-sided valvular disease, and severe LVH. ADAPT-HEART was validated in four community hospitals in the US, and the population-based cohort of ELSA-Brasil. We assessed the model's performance as a predictive biomarker among those without baseline SHD across hospital-based sites and the UK Biobank.

Results: The development population had a median age of 66 [IQR, 54-77] years and included 49,947 (50.3%) women, with 18,896 (19.0%) having any SHD. ADAPT-HEART had an AUROC of 0.879 (95% CI, 0.870-0.888) with good calibration for detecting SHD in the test set, and consistent performance in hospital-based external sites (AUROC: 0.852-0.891) and ELSA-Brasil (AUROC: 0.859). Among those without baseline SHD, high vs. low ADAPT-HEART probability conferred a 2.8- to 5.7-fold increase in the risk of future SHD across data sources (all P<0.05).

Conclusions: We propose a novel model that detects and predicts a range of SHDs from noisy single-lead ECGs obtainable on portable/wearable devices, providing a scalable strategy for community-based screening and risk stratification for SHD.

Keywords: Structural Heart Disease; Mass Screening; Wearable Electronic Devices; Electrocardiography; Public Health

INTRODUCTION

Early diagnosis of structural heart disease (SHD) enables the timely initiation of therapies that can improve disease trajectory and patient outcomes.[1–6] While a majority of SHDs are characterized by a long presymptomatic phase,[5–8] there is currently no systematic approach for detecting SHD before symptom onset. This challenge arises from the lack of feasible screening strategies that can be deployed at scale without requiring advanced imaging or detailed healthcare evaluation.[9,10] Currently, the diagnosis of SHD requires referral for an echocardiogram or other advanced cardiac imaging, with no specific guidance on which asymptomatic patients should be referred.[11] The increasing availability of wearable and portable devices, many of which can capture single-lead ECGs, provides a low-cost cardiac diagnostic modality for a broad population.[12,13] Nonetheless, there are no discernible signatures for detecting SHD from portable single-lead ECGs.

The advent of artificial intelligence (AI) algorithms has enabled the detection of subtle, human-unreadable digital signatures of distinct SHDs using 12-lead electrocardiograms (ECG).[14,15] While such advances in AI enable a new role for ECGs as a modality for SHD screening, reliance on 12-lead ECGs obtained in clinical settings limits the scale and impact of such a screening strategy.[14,16] Specifically, this strategy excludes individuals who have not undergone such testing, either due to the absence of clinical indications or lack of access. Conversely, portable and wearable devices enable the acquisition of single-lead ECGs from a broader population.[12,13] We have previously demonstrated that left ventricular systolic dysfunction (LVSD), a key SHD, can be accurately identified on a noisy lead I ECG obtainable on wearable and portable

devices.[17] Nevertheless, detecting individual conditions in a community setting is challenging due to their low prevalence, with a high rate of false positives, even with high-performing models.[16] This obstacle can be addressed by using single-lead ECGs to detect a composite of multiple SHDs, which would result in fewer false positives due to the higher overall prevalence of the composite SHD. This approach could represent an objective and scalable strategy for referral for cardiac imaging to detect SHD.

To fully leverage the promise of AI-ECG for transforming community-level ECG screening for SHD, we sought to develop and externally validate a noise-resilient deep learning algorithm to identify a range of clinically actionable SHDs spanning LVSD, moderate or severe left-sided valvular disease, and severe left ventricular hypertrophy (sLVH), using single-lead ECGs. We also explored the predictive role of this algorithm for the risk of incident SHD.

METHODS

Data Sources

We developed the model using ECG paired with echocardiographic data from the Yale New Haven Hospital (YNHH) during 2015-2023 (**Figure S1**). YNHH serves a large and diverse population in New Haven, one of the most representative counties in the US, and across Connecticut.[18] We accessed 2.0 million ECG waveforms containing raw voltage data from all 12 leads of a standard clinical ECG. The echocardiographic data consisted of 335,184 transthoracic echocardiograms (TTE) with structured reports. For external validation, we obtained data from four geographically distinct community hospitals in the Yale New Haven Health System, covering other towns and regions in

Southern Connecticut and Rhode Island. These include the Bridgeport Hospital, Greenwich Hospital, Lawrence + Memorial Hospital, and Westerly Hospital. To prevent any representation of the same patients across development and external validation datasets, we excluded patients from the external validation sites whose data had been used for model development. In addition to the hospital-based cohorts, we assessed the external validity of the model in the Brazilian Longitudinal Study of Adult Health (ELSA-Brasil), the largest prospective population-based cohort in Brazil with protocolized ECG and TTEs.[19]

To evaluate the predictive significance of the model, in addition to hospital-based cohorts, we included participants from the UK Biobank (UKB). UKB is the largest population-based cohort from the UK where participants underwent protocolized ECGs during 2014-2020 with linked data from the national death registry as well as the comprehensive electronic health records (EHR) data from the National Health Service England.[20]

Study Population

To develop the model and assess its external validity, we included individuals from the clinical sites and ELSA-Brasil. From the clinical sites, we identified patients with at least one pair of ECG-TTE occurring within a 30-day window. Each ECG was paired with at most one TTE, while each TTE could have been paired with multiple ECGs. In cases where multiple TTEs were obtained within 30 days of an ECG, only the TTE closest to the ECG was included. Conversely, if multiple ECGs were recorded within 30 days of a TTE, we included up to five ECGs per patient in the development set to avoid over-

representation of patients with frequent health encounters. We excluded information from patients who had a history of cardiac procedures at the time of ECG, including coronary artery bypass grafting, aortic or mitral valve procedures, left ventricular assist device implantation, heart transplant, alcohol septal ablation, and ventricular myectomy (**Figure S1**). From ELSA-Brasil, we included all participants who underwent a simultaneous ECG and TTE at their baseline visit during 2008-2010.

To assess the predictive role of the algorithm in predicting incident SHD, we included individuals from the clinical sites and the UKB. From the clinical sites, we identified patients with an ECG during 2013-2023 at YNHH and the four community hospitals. We excluded those with SHD based on TTE, heart failure based on diagnosis codes, or left-sided valve replacement or repair based on procedure codes before the index date (**Table S1**). In the clinical sites, diagnosis codes were recorded as the International Classification of Diseases, Tenth Revision, Clinical Modification (ICD-10-CM), and procedure codes were recorded as the International Classification of Diseases, Tenth Revision, Procedure Coding System (ICD-10-PCS) or Current Procedural Terminology 4 (CPT4). The index date was defined as the date of the first ECG acquisition at any time after one year from their first health encounter. This one-year blanking period was included to ensure prevalent SHD was not misclassified as incident SHD. We also excluded those from YNHH whose data were used for model development.

For predictive assessment in the UKB, we identified participants who received protocolized ECG during 2014-2021. We excluded those with a history of heart failure or left-sided valvular disease based on diagnosis codes, as well as those who had

undergone left-sided valve replacement or repair based on procedure codes, before their ECG acquisition (**Table S1**). Diagnoses were coded in the International Classification of Diseases, Ninth and Tenth Revisions (ICD-9 and ICD-10), and procedures were coded in the Office of Population Censuses and Surveys Classification of Interventions and Procedures, versions 3 and 4 (OPCS-3 and OPCS-4). This information was obtained from the linkage of the UKB with the national EHR, predating the UKB enrollment in 2006, to ensure complete capture of baseline SHD status.

Study Covariates

We defined SHD as the TTE-defined presence of a composite of LVSD, moderate or severe left-sided valvular disease, and/or sLVH. LVSD was defined as a left ventricular ejection fraction (LVEF) <40%. Moderate or severe left-sided valvular diseases were identified by the presence of any moderate or severe aortic regurgitation (AR), aortic stenosis (AS), mitral regurgitation (MR), or mitral stenosis (MS). We characterized sLVH by an interventricular septal diameter at end-diastole (IVSd) greater than 15 mm with concomitant moderate or severe left ventricular diastolic dysfunction (LVDD). All echocardiographic indices were measured according to the American Society of Echocardiography guidelines.[11] IVSd and LVEF were measured objectively, while the severity of LVDD and valvular disease were graded by the reading cardiologist, based on the guidelines.[11] LVEF was defined using three-dimensional echo, Simpson's biplane, or visual estimation methods. The valvular component of SHD entailed moderate, moderate to severe, or severe stenotic or regurgitant disorders of aortic or mitral valves. We also evaluated an alternative definition for SHD that consists of LVSD

and sLVH, but included severe, instead of moderate or severe, left-sided valvular disease.

Development of an Ensemble Noise-adapted Model

We randomly split the included ECGs into training, internal validation, and held-out test sets with a ratio of 85:5:10 at the patient level to avoid train-test contamination. In the training set, we retained up to five random ECGs per patient to ensure the adequacy of training data, as noted above. However, the validation and test sets included only one random ECG per patient to avoid any artificial inflation or deflation of the model's performance. Similarly, we included one random ECG per patient from the hospital-based external validation sites.

We employed a standard signal preprocessing strategy to extract the signal data from lead I - representing the standard lead captured by portable devices - of 12-lead ECG recordings in the YNHH development set. However, the lead I isolated from clinical 12-lead ECGs is often less noisy than real-world lead I ECGs acquired using portable and wearable devices.[21] To account for these differences, we adopted our previously developed method to construct noise-resilient algorithms.[17] Briefly, to conform clinical ECGs with portable ECGs, we augmented ECGs in the training set using random Gaussian noise, while we tested the model on clean ECGs that were not noised (**Supplemental Methods**). Algorithms trained using this approach have retained their performance when tested on lead I ECGs, even when augmented with real-world noise from portable devices.[17]

The model development involved a two-step approach where we first trained separate deep learning algorithms to detect individual SHD components, and then combined their outputs with the patient's age and sex to detect the composite SHD label. To train label-specific algorithms, we employed a convolutional neural network (CNN) architecture with excellent discrimination for detecting LVSD from single-lead ECG.[17] Leveraging this architecture and transfer learning, we trained six distinct CNN models to predict LVSD, moderate or severe left-sided valvular disease, moderate or severe AR, moderate or severe AS, moderate or severe MR, and sLVH (**Supplemental Methods**). All models were trained using all ECGs in the training set. However, given the low prevalence of sLVH (<1%), we adopted a case-control training strategy with age- and sex-matching for the sLVH model to ensure learning specific ECG signatures of sLVH. For the sLVH training set, each ECG from patients with sLVH was matched with 10 ECGs from patients without sLVH, ensuring that they had the same sex and were within a 5-year age window. To further improve the model's ability to learn sLVH ECG signatures, we trained the sLVH model on extreme phenotypes, excluding intermediate ones. For training, positive cases were defined by the sLVH criteria (IVSd >15 mm and moderate or severe LVDD), and negative cases were defined by an IVSd <12 mm in the absence of moderate or severe LVDD. The model's performance was then assessed based on the presence or absence of sLVH. Therefore, while the sLVH model was trained on extreme phenotypes, it was tested against the full spectrum of phenotypes in the internal validation and held-out test sets.

Leveraging an ensemble learning strategy, we developed ADAPT-HEART (AI Deep learning for Adapting Portable Technology in HEART disease detection) using

extreme gradient boosting to predict the composite SHD based on the CNN models' output probabilities, as well as the patient's age and sex as predictive features (**Figure 1**). The ensemble model's performance was evaluated in the held-out test set and external validation sets. For the predictive assessment, we deployed the ensemble algorithm to obtain the probability of concomitant SHD from corresponding ECGs.

Study Outcome

The primary study outcome was the model's discrimination for detecting the presence of composite SHD, measured by the area under the receiver operating characteristics curve (AUROC). The exploratory outcome was the model's performance for predicting new-onset SHD in individuals without baseline SHD, measured by the hazard ratio (HR) of high- vs. low-risk groups. We defined the risk groups by the model output probability using the threshold for optimizing sensitivity at 90%. For the predictive assessment, incident SHD was characterized as TTE-defined SHD, heart failure hospitalization based on diagnosis codes, or left-sided valve replacement or repair based on procedure codes in YNHH and hospital-based external validation sites. In the UKB, due to the absence of serial imaging, incident SHD was characterized by hospitalization for heart failure, or the first recorded diagnosis code of left-sided valvular disease or procedure codes for left-sided valve replacement or repair (**Table S1**).

Statistical Analysis

Continuous and categorical variables were reported as medians and interquartile ranges (IQRs) and numbers and percentages, respectively. The model's performance

was presented using AUROC, along with sensitivity, specificity, positive predictive value (PPV), negative predictive value (NPV), and F1 score of the model across the thresholds and specifically for the threshold corresponding to a sensitivity of 90% using the internal validation set. The 95% confidence intervals (CI) for AUROC were calculated using bootstrapping with 1000 iterations. We computed 95% CI for sensitivity, specificity, PPV, and NPV using the standard error formula for proportion. To quantify the model calibration, we calculated the Brier score, which is the mean squared difference between the predicted probabilities and the actual outcomes, ranging from 0 to 1, with values closer to 0 representing good calibration.[22]

For the predictive assessment, we fit age- and sex-adjusted Cox proportional hazard models with incident SHD as the dependent variable and the risk groups defined by the model output probability using the threshold for optimizing sensitivity at 90% as the key independent variable. These risk groups comprised those with a high probability of SHD but without SHD, false positives, compared with those with a low probability of SHD and without SHD, true negatives. We further adjusted the Cox models for baseline hypertension and diabetes mellitus. Additionally, we accounted for the competing risk of death using the Fine-Gray subdistribution hazard model.[23]

All statistical analyses were executed using Python 3.11.2, and R version 4.2.0. Statistical tests were two-sided with the significance level set at 0.05. The Yale Institutional Review Board approved the study protocol and waived the need for informed consent as the study involves analyzing pre-existing data. Patients who opted out of research studies were not included in the study. Participants from ELSA-Brasil

and the UKB provided informed consent, and their de-identified data were analyzed in this study.[19,20] We used the UK Biobank Resource under Application Number 71033.

RESULTS

Study Population

The model was developed in 266,740 ECGs with paired TTE data from 99,205 unique patients with a median age of 66 [54-77] years. This included 49,947 (50.3%) women, 13,503 (14.0%) non-Hispanic Black, and 7,832 (8.1%) Hispanic individuals (**Table 1**). In the development set, 60,096 (22.5%) ECGs were linked to a TTE with SHD, including 25,552 (9.6%) with LVSD, 42,989 (16.1%) with moderate or severe left-sided valvular disease, and 1,004 (0.4%) with sLVH (**Table 1**). The training set included 261,228 ECGs from 93,693 unique patients, while the validation and held-out test sets included 5,512 and 11,023 ECGs, respectively, with one ECG drawn per person (**Figure S1**, **Table S2**). For external validation, we included 65,988 patients from four community hospitals and 3,014 participants from the ELSA-Brasil with diverse demographic backgrounds (**Table 1**, **Figure S1**). The prevalence of SHD varied from 20.2%-27.1% in hospital-based external validation sites compared with 2.9% in ELSA-Brasil (**Table 1**).

Detection of Structural Heart Disease

ADAPT-HEART demonstrated an AUROC of 0.879 (95% CI, 0.870-0.888) for detecting SHD on a single-lead ECG in the YNHH held-out test set (**Figure 2A**, **Table S3**). The model was well-calibrated for detecting the primary study outcome with a Brier score of 0.083. ADAPT-HEART had higher discrimination (AUROC, 0.910 [95% CI, 0.900-

0.920]) when the composite SHD label included severe, instead of moderate or severe, left-sided valvular disease (**Figure 2B**). The model's probability threshold corresponding to a sensitivity of 90% for predicting SHD in the internal validation set was 0.190. At this probability threshold, in the held-out test set, ADAPT-HEART had a sensitivity of 90.9% (95% CI, 90.2-91.6), specificity of 61.8% (95% CI, 60.6-63.0), PPV of 54.6% (95% CI, 53.4-55.9), and NPV of 93.1% (95% CI, 92.4-93.7) for detecting SHD. A higher probability threshold, aimed at optimizing the F1 score, had higher specificity and PPV (**Figure 3**, **Table S4**).

ADAPT-HEART performed consistently across external validation cohorts, with the AUROC varying from 0.852 (95% CI, 0.845-0.859) at Bridgeport Hospital to 0.891 (95% CI, 0.877-0.904) with good calibration across clinical sites (**Figure 2**, **Table S3**). In the prospective ELSA-Brasil that had protocolized paired ECGs and TTEs, ADAPT-HEART retained high discrimination and good calibration with an AUROC of 0.859 (95% CI, 0.816-0.895) (**Figure 2**). The model's performance was comparable across key demographic subgroups of age, sex, and race and ethnicity in the held-out test set and external validation sites (**Figure 4**, **Tables S5-10**). Individual label-specific models demonstrated consistent performance in the YNHH held-out test set and external validation sites (**Tables S11-16**, **Figure S2**)

Predictive Performance of ADAPT-HEART

For the predictive assessment, we identified 127,547 individuals from YNHH, 105,992 from hospital-based external validation sites, and 41,800 from the UKB (**Table S17**). Over a median follow-up of 4.0 [1.7-6.4] years, 5,353 (4.2%) patients developed new-

onset SHD in YNHH compared with 5.6% to 8.1% across hospital-based external validation sites with the median follow-up ranging from 2.4 to 4.7 years (**Table S17**). In the UKB, 413 (1.0%) participants had new-onset SHD over a median follow-up of 3.0 [2.1-4.5] years. A screen-positive single-lead ECG defined by ADAPT-HEART was associated with a 4-fold higher hazard of incident SHD in YNHH (adjusted HR, 4.03; 95% CI, 3.71-4.37), with a consistently elevated risk across hospital-based cohorts (**Table 2**). In the UKB, a positive AI-ECG portended a nearly 3-fold hazard (HR: 2.82; 95% CI, 2.13-3.74) for incident SHD, with a modified definition that did not include serial imaging. The risk of SHD was consistently observed with a positive AI-ECG screen, independent of additional adjustment for cardiovascular risk factors of hypertension and diabetes mellitus, and also the competing risk of death (**Table 2**).

DISCUSSION

We developed and externally validated ADAPT-HEART, a noise-adapted deep learning algorithm that detects and predicts SHD from single-lead ECGs obtainable on portable and wearable devices, using a large and diverse population. Our novel noise-adapted strategy for single-lead ECGs demonstrates robust discrimination and calibration for detecting a composite of multiple clinically significant SHDs, including LVSD, left-sided valvular disease, and sLVH, using age, sex, and a single-lead ECG recording as the only inputs. ADAPT-HEART performed comparably across external validation cohorts and key demographic subgroups. Depending on the prevalence of SHD in the target screening population, the screening strategy informed by ADAPT-HEART requires 2-12 individuals to undergo TTE to find one case with any SHD. Additionally, individuals

without baseline SHD but with high ADAPT-HEART probability were three to six times more likely to develop SHD.

ADAPT-HEART builds upon the current literature by providing a scalable strategy for SHD screening in the community using single-lead ECGs acquired on portable and wearable devices.[16,24–26] The advantages of using single-lead ECGs compared with 12-lead ECGs for SHD screening are two-fold; first, the feasibility of obtaining single-lead ECGs on portable devices expands the scale of screening from healthcare settings to broader communities, and second, it allows targeting individuals regardless of their access to healthcare. Additionally, ADAPT-HEART leverages our previous work to retain robust performance despite the noisy acquisition of real-world portable ECGs.[14,15,17] We also employed an ensemble learning strategy that enables the learning of granular ECG signatures for individual SHDs, resulting in superior performance compared with a single multi-label CNN model for detecting the composite SHD label.[16] Thus, the rapidly increasing number of portable and wearable device users, combined with the ADAPT-HEART development, significantly enhances SHD screening strategies in the communities.[12,13,27]

In addition to the diagnostic value of ADAPT-HEART, we demonstrated its role as a biomarker for predicting incident SHD using single-lead ECGs. Thus, ADAPT-HEART not only enables the identification of individuals with asymptomatic SHD but also enables risk stratification for those without SHD. This approach can be particularly valuable to risk stratify asymptomatic individuals at risk for SHD, such as those with hypertension and ischemic heart disease, and older adults.[28] The lack of an evidence-based protocolized follow-up for such individuals underscores the need for precision

tools such as ADAPT-HEART to provide personalized care to at-risk people. Additionally, the predictive significance of ADAPT-HEART for new-onset SHD may serve as its clinical explainability, where a high model probability in those without baseline SHD can indicate electrical signatures of SHD in the subclinical stages.

Leveraging ADAPT-HEART and single-lead ECGs for SHD screening in the community can transform cardiovascular care by enabling early detection and timely treatment. Beyond the use case of ADAPT-HEART for SHD screening among the growing number of portable and wearable device users, it can also enhance screening for individuals without such devices or those less likely to access healthcare settings.[29] Public health promotion programs, such as hypertension screening in barbershops and pharmacies or cancer screening in churches, can be adapted to establish SHD screening programs using portable ECGs.[30,31] These community outreach efforts would allow the screening of a large number of individuals for SHD using a limited number of portable devices, offering an efficient strategy to identify individuals who may benefit from advanced cardiac imaging.[32,33] Furthermore, the proposed screening strategy can help prioritize echocardiographic studies in underserved areas, including low- and middle-income countries.[34,35] Therefore, our study establishes new frameworks to improve SHD diagnosis at scale and serves as a tool that has the potential to reduce disparities in SHD care.

Our findings should be interpreted in the light of the following limitations. First, ADAPT-HEART was developed using pairs of ECG-TTE among individuals who underwent these tests within 30 days of each other, representing a selective population. However, the model performed consistently across four hospitals and a population-

based cohort study, indicating generalizability to distinct settings. Second, hospitals in the same health system as the development set were part of model validation sets. Nonetheless, we excluded patients from the external validation sites whose data were used for model development to ensure independence of development and external validation populations. Furthermore, the model generalized well to the population-based cohort of ELSA-Brasil, suggesting its robustness and external validity outside the Yale New Haven Health System. Third, we developed the model using lead I extracted from 12-lead ECGs rather than portable-acquired ECGs. However, the lack of a large and rigorous data source where portable ECGs are paired with advanced cardiac imaging data precludes the development of such a model using portable ECGs. Additionally, single-lead AI-ECG algorithms that were developed using clinical 12-lead ECGs have been shown to retain performance while deployed to real-world smartwatch ECGs.[36] We also adopted a noising strategy for model development to enhance the model's resilience to noise in real-world settings.[17]

CONCLUSION

We propose a novel model that detects and predicts a range of SHDs from noisy single-lead ECGs obtainable on portable/wearable devices, providing a scalable strategy for community-based screening and risk stratification for SHD.

Acknowledgments

None.

Funding

The study was supported, in part, by research funding from Bristol Myers Squibb to Yale. Dr. Khera was supported by the National Heart, Lung, and Blood Institute of the National Institutes of Health (under awards R01AG089981, R01HL167858, and K23HL153775) and the Doris Duke Charitable Foundation (under award 2022060). Dr. Oikonomou was supported by the National Heart, Lung, and Blood Institute of the National Institutes of Health (under award F32HL170592). The funders had no role in the design and conduct of the study; collection, management, analysis, and interpretation of the data; preparation, review, or approval of the manuscript; and decision to submit the manuscript for publication.

Disclosure of Interest

Mr. Khunte and Dr. Khera are the coinventors of U.S. Provisional Patent Application No. 63/428,569. Dr. Khera is the coinventor of U.S. Pending Patent Application No. 63/346,610, and is the co-founder of Ensight-AI with Dr. Krumholz. Dr. Khera is the coinventor of U.S. Provisional Pending Patent Applications WO2023230345A1, US20220336048A1, 63/484,426, 63/508,315, 63/580,137, 63/606,203, 63/619,241, and 63/562,335 all unrelated to current work, and is a co-founder of Evidence2Health, a precision health platform for evidence-based care. He is also an associate editor at JAMA, and received support from the National Heart, Lung, and Blood Institute of the

National Institutes of Health (under awards R01AG089981, R01HL167858, and K23HL153775) and the Doris Duke Charitable Foundation (under award, 2022060). He also receives research support, through Yale, from Bristol-Myers Squibb, Novo Nordisk, and BridgeBio. Dr. Oikonomou receives support from the National Heart, Lung, and Blood Institute of the National Institutes of Health (under award F32HL170592). He is an academic co-founder of Evidence2Health LLC, a co-inventor in patent applications (18/813,882, 17/720,068, 63/619,241, 63/177,117, 63/580,137, 63/606,203, 63/562,335, US11948230B2 , US20210374951A1), has been a consultant for Caristo Diagnostics Ltd and Ensight-AI Inc, and has received royalty fees from technology licensed through the University of Oxford, outside the submitted work. Dr. Krumholz works under contract with the Centers for Medicare & Medicaid Services to support quality measurement programs, was a recipient of a research grant from Johnson & Johnson, through Yale University, to support clinical trial data sharing; was a recipient of a research agreement, through Yale University, from the Shenzhen Center for Health Information for work to advance intelligent disease prevention and health promotion; collaborates with the National Center for Cardiovascular Diseases in Beijing; receives payment from the Arnold & Porter Law Firm for work related to the Sanofi clopidogrel litigation, from the Martin Baughman Law Firm for work related to the Cook Celect IVC filter litigation, and from the Siegfried and Jensen Law Firm for work related to Vioxx litigation; chairs a Cardiac Scientific Advisory Board for UnitedHealth; was a member of the IBM Watson Health Life Sciences Board; is a member of the Advisory Board for Element Science, the Advisory Board for Facebook, and the Physician Advisory Board for Aetna; and is the co-founder of Hugo Health, a personal health information platform, and co-founder

of Refactor Health, a healthcare AI-augmented data management company, and Ensight-AI, Inc. All other authors declare no relevant competing interests.

Data Availability Statement

The data from the Yale New Haven Health System represent protected health information. To protect patient privacy, the Yale Institutional Review Board does not allow sharing of these data. Data from the Brazilian Longitudinal Study of Adult Health and the UK Biobank are available for research to licensed users.

REFERENCES

1. Wolfe NK, Mitchell JD, Brown DL. The independent reduction in mortality associated with guideline-directed medical therapy in patients with coronary artery disease and heart failure with reduced ejection fraction. *Eur Heart J Qual Care Clin Outcomes* 2021;**7**:416–421.

2. Olivotto I, Oreziak A, Barriales-Villa R, Abraham TP, Masri A, Garcia-Pavia P, Saberi S, Lakdawala NK, Wheeler MT, Owens A, Kubanek M, Wojakowski W, Jensen MK, Gimeno-Blanes J, Afshar K, Myers J, Hegde SM, Solomon SD, Sehnert AJ, Zhang D, Li W, Bhattacharya M, Edelberg JM, Waldman CB, Lester SJ, Wang A, Ho CY, Jacoby D, EXPLORER-HCM study investigators. Mavacamten for treatment of symptomatic obstructive hypertrophic cardiomyopathy (EXPLORER-HCM): a randomised, double-blind, placebo-controlled, phase 3 trial. *Lancet* 2020;**396**:759–769.

3. Bonow RO, Leon MB, Doshi D, Moat N. Management strategies and future challenges for aortic valve disease. *Lancet* 2016;**387**:1312–1323.

4. Wang TJ, Evans JC, Benjamin EJ, Levy D, LeRoy EC, Vasan RS. Natural history of asymptomatic left ventricular systolic dysfunction in the community. *Circulation* 2003;**108**:977–982.

5. Arcy JL d', Coffey S, Loudon MA, Kennedy A, Pearson-Stuttard J, Birks J, Frangou E, Farmer AJ, Mant D, Wilson J, Myerson SG, Prendergast BD. Large-scale community echocardiographic screening reveals a major burden of undiagnosed valvular heart disease in older people: the OxVALVE Population Cohort Study. *Eur Heart J* 2016;**37**:3515–3522.

6. Wang TJ, Levy D, Benjamin EJ, Vasan RS. The Epidemiology of Asymptomatic Left Ventricular Systolic Dysfunction: Implications for Screening. *Ann Intern Med* 2003;**138**:907–916.

7. Sara JD, Toya T, Taher R, Lerman A, Gersh B, Anavekar NS. Asymptomatic left ventricle systolic dysfunction. *Eur Cardiol* 2020;**15**:e13.

8. Manning WJ. Asymptomatic aortic stenosis in the elderly: a clinical review. *JAMA* 2013;**310**:1490–1497.

9. Galasko GI, Barnes SC, Collinson P, Lahiri A, Senior R. What is the most cost-effective strategy to screen for left ventricular systolic dysfunction: natriuretic peptides, the electrocardiogram, hand-held echocardiography, traditional echocardiography, or their combination? *Eur Heart J* 2006;**27**:193–200.

10. Steinberg DH, Staubach S, Franke J, Sievert H. Defining structural heart disease in the adult patient: current scope, inherent challenges and future directions. *Eur Heart J Suppl* 2010;**12**:E2–E9.

11. Mitchell C, Rahko PS, Blauwet LA, Canaday B, Finstuen JA, Foster MC, Horton K, Ogunyankin KO, Palma RA, Velazquez EJ. Guidelines for performing a comprehensive transthoracic echocardiographic examination in adults: Recommendations from the American society of echocardiography. *J Am Soc Echocardiogr* 2019;**32**:1–64.

12. Dhingra LS, Aminorroaya A, Oikonomou EK, Nargesi AA, Wilson FP, Krumholz HM, Khera R. Use of wearable devices in individuals with or at risk for cardiovascular disease in the US, 2019 to 2020. *JAMA Netw Open* 2023;**6**:e2316634.

13. Aminorroaya A, Dhingra LS, Nargesi AA, Oikonomou EK, Krumholz HM, Khera R. Use of smart devices to track cardiovascular health goals in the United States. *JACC Adv* 2023;**2**:100544.

14. Sangha V, Nargesi AA, Dhingra LS, Khunte A, Mortazavi BJ, Ribeiro AH, Banina E, Adeola O, Garg N, Brandt CA, Miller EJ, Ribeiro ALJ, Velazquez EJ, Giatti L, Barreto SM, Foppa M, Yuan N, Ouyang D, Krumholz HM, Khera R. Detection of Left Ventricular Systolic Dysfunction From Electrocardiographic Images. *Circulation* 2023.

15. Sangha V, Mortazavi BJ, Haimovich AD, Ribeiro AH, Brandt CA, Jacoby DL, Schulz WL, Krumholz HM, Ribeiro ALP, Khera R. Automated multilabel diagnosis on electrocardiographic images and signals. *Nat Commun* 2022;**13**:1583.

16. Ulloa-Cerna AE, Jing L, Pfeifer JM, Raghunath S, Ruhl JA, Rocha DB, Leader JB, Zimmerman N, Lee G, Steinhubl SR, Good CW, Haggerty CM, Fornwalt BK, Chen R. rECHOmmend: An ECG-Based Machine Learning Approach for Identifying Patients at Increased Risk of Undiagnosed Structural Heart Disease Detectable by Echocardiography. *Circulation*.

17. Khunte A, Sangha V, Oikonomou EK, Dhingra LS, Aminorroaya A, Mortazavi BJ, Coppi A, Brandt CA, Krumholz HM, Khera R. Detection of left ventricular systolic dysfunction from single-lead electrocardiography adapted for portable and wearable devices. *NPJ Digit Med* 2023;**6**:124.

18. Middle America Project 2022, Ranking America's Most Typical Counties. *Echelon Insights*.

19. Aquino EML, Barreto SM, Bensenor IM, Carvalho MS, Chor D, Duncan BB, Lotufo PA, Mill JG, Molina MDC, Mota ELA, Passos VMA, Schmidt MI, Szklo M. Brazilian Longitudinal Study of Adult Health (ELSA-Brasil): objectives and design. *Am J Epidemiol* 2012;**175**:315–324.

20. Sudlow C, Gallacher J, Allen N, Beral V, Burton P, Danesh J, Downey P, Elliott P, Green J, Landray M, Liu B, Matthews P, Ong G, Pell J, Silman A, Young A, Sprosen T, Peakman T, Collins R. UK biobank: an open access resource for

identifying the causes of a wide range of complex diseases of middle and old age. *PLoS Med* 2015;**12**:e1001779.

21. Mannhart D, Lischer M, Knecht S, Fay de Lavallaz J du, Strebel I, Serban T, Vögeli D, Schaer B, Osswald S, Mueller C, Kühne M, Sticherling C, Badertscher P. Clinical Validation of 5 Direct-to-Consumer Wearable Smart Devices to Detect Atrial Fibrillation: BASEL Wearable Study. *JACC Clin Electrophysiol* 2023;**9**:232–242.

22. Brier GW. Verification of Forecasts Expressed in Terms of Probability. *Mon Weather Rev* 1950;**78**:1–3.

23. Austin PC, Fine JP. Practical recommendations for reporting Fine-Gray model analyses for competing risk data. *Stat Med* 2017;**36**:4391–4400.

24. Elias Pierre, Poterucha Timothy J., Rajaram Vijay, Moller Luca Matos, Rodriguez Victor, Bhave Shreyas, Hahn Rebecca T., Tison Geoffrey, Abreau Sean A., Barrios Joshua, Torres Jessica Nicole, Hughes J. Weston, Perez Marco V., Finer Joshua, Kodali Susheel, Khalique Omar, Hamid Nadira, Schwartz Allan, Homma Shunichi, Kumaraiah Deepa, Cohen David J., Maurer Mathew S., Einstein Andrew J., Nazif Tamim, Leon Martin B., Perotte Adler J. Deep Learning Electrocardiographic Analysis for Detection of Left-Sided Valvular Heart Disease. *J Am Coll Cardiol* 2022;**80**:613–626.

25. Kwon J-M, Lee SY, Jeon K-H, Lee Y, Kim K-H, Park J, Oh B-H, Lee M-M. Deep Learning-Based Algorithm for Detecting Aortic Stenosis Using Electrocardiography. *J Am Heart Assoc* 2020;**9**:e014717.

26. Attia ZI, Kapa S, Lopez-Jimenez F, McKie PM, Ladewig DJ, Satam G, Pellikka PA, Enriquez-Sarano M, Noseworthy PA, Munger TM, Asirvatham SJ, Scott CG, Carter RE, Friedman PA. Screening for cardiac contractile dysfunction using an artificial intelligence–enabled electrocardiogram. *Nat Med* 2019;**25**:70–74.

27. Al-Alusi MA, Khurshid S, Wang X, Venn RA, Pipilas D, Ashburner JM, Ellinor PT, Singer DE, Atlas SJ, Lubitz SA. Trends in Consumer Wearable Devices With Cardiac Sensors in a Primary Care Cohort. *Circ Cardiovasc Qual Outcomes* 2022;**15**:e008833.

28. Heidenreich PA, Bozkurt B, Aguilar D, Allen LA, Byun JJ, Colvin MM, Deswal A, Drazner MH, Dunlay SM, Evers LR, Fang JC, Fedson SE, Fonarow GC, Hayek SS, Hernandez AF, Khazanie P, Kittleson MM, Lee CS, Link MS, Milano CA, Nnacheta LC, Sandhu AT, Stevenson LW, Vardeny O, Vest AR, Yancy CW. 2022 AHA/ACC/HFSA Guideline for the Management of Heart Failure: A Report of the American College of Cardiology/American Heart Association Joint Committee on Clinical Practice Guidelines. *Circulation* 2022;**145**:e895–e1032.

29. Sandhu AT, Tisdale RL, Rodriguez F, Stafford RS, Maron DJ, Hernandez-Boussard T, Lewis E, Heidenreich PA. Disparity in the setting of incident heart failure diagnosis. *Circ Heart Fail* 2021;**14**.

30. Victor RG, Lynch K, Li N, Blyler C, Muhammad E, Handler J, Brettler J, Rashid M, Hsu B, Foxx-Drew D, Moy N, Reid AE, Elashoff RM. A cluster-randomized trial of blood-pressure reduction in black barbershops. *N Engl J Med* 2018;**378**:1291–1301.

31. McNeill LH, Reitzel LR, Escoto KH, Roberson CL, Nguyen N, Vidrine JI, Strong LL, Wetter DW. Engaging black churches to address cancer health disparities: Project CHURCH. *Front Public Health* 2018;**6**.

32. Shah K, Pandya A, Kotwani P, Saha S, Desai C, Tyagi K, Saxena D, Puwar T, Gaidhane S. Cost-effectiveness of portable electrocardiogram for screening cardiovascular diseases at a primary health center in Ahmedabad district, India. *Front Public Health* 2021;**9**.

33. Chen W, Khurshid S, Singer DE, Steven J. Atlas, Ashburner JM, Ellinor PT, McManus DD, Lubitz SA, Chhatwal J. Cost-effectiveness of Screening for Atrial Fibrillation Using Wearable Devices. *JAMA Health Forum* 2022;**3**:e222419–e222419.

34. Mocumbi AO. Cardiovascular health care in low- and middle-income countries. *Circulation* 2024;**149**:557–559.

35. Diamantino AC, Nascimento BR, Nunes MCP, Sable CA, Oliveira KKB, Rabelo LC, Franco J, Diamantino LC, Barbosa MM, Reese AT, Olivieri L, Lima EM de, Martins LNA, Colosimo EA, Beaton AZ, Ribeiro ALP, PROVAR+ (Programa de RastreamentO da VAlvopatia Reumática e outras Doenças Cardiovasculares) investigators. Impact of incorporating echocardiographic screening into a clinical prediction model to optimise utilisation of echocardiography in primary care. *Int J Clin Pract* 2021;**75**:e13686.

36. Attia ZI, Harmon DM, Dugan J, Manka L, Lopez-Jimenez F, Lerman A, Siontis KC, Noseworthy PA, Yao X, Klavetter EW, Halamka JD, Asirvatham SJ, Khan R, Carter RE, Leibovich BC, Friedman PA. Prospective evaluation of smartwatch-enabled detection of left ventricular dysfunction. *Nat Med* 2022;**28**:2497–2503.

Table 1. Demographics and Prevalence of Structural Heart Disease in the Development and External Validation Set at Patient- and ECG-level

Characteristic*	Development Set		Held-out Test Set	External Validation Sets				
	ECG	Patients	Yale New Haven Hospital	Bridgeport Hospital	Greenwich Hospital	Lawrence + Memorial Hospital	Westerly Hospital	ELSA-Brasil
Number	266,740	99,205	11,023	18,222	4,720	17,867	3,782	3,014
Age (years)	67.8 [56.0-78.3]	66.4 [54.1-77.3]	66.3 [53.7-77.4]	68.5 [56.0-80.0]	74.0 [59.9-84.5]	68.7 [57.3-79.5]	73.3 [62.2-82.4]	62.0 [57.0-67.0]
Female Sex	128529 (48.2%)	49947 (50.3%)	5501 (49.9%)	9210 (50.5%)	2316 (49.1%)	8634 (48.3%)	1821 (48.1%)	1596 (53.0%)
Race and Ethnicity								
White	179193 (68.8%)	66132 (68.5%)	7264 (67.5%)	10420 (58.2%)	3110 (67.8%)	12944 (73.9%)	3181 (85.0%)	1661 (55.1%)
Black	40055 (15.4%)	13503 (14.0%)	1474 (13.7%)	3472 (19.4%)	182 (4.0%)	1184 (6.8%)	56 (1.5%)	455 (15.1%)
Asian	3878 (1.5%)	1648 (1.7%)	183 (1.7%)	218 (1.2%)	121 (2.6%)	221 (1.3%)	23 (0.6%)	74 (2.5%)
Hispanic	21572 (8.3%)	7832 (8.1%)	897 (8.3%)	2849 (15.9%)	504 (11.0%)	1271 (7.3%)	53 (1.4%)	0 (0%)
Pardo	0 (0%)	0 (0%)	0 (0%)	0 (0%)	0 (0%)	0 (0%)	0 (0%)	753 (25.0%)
Others	15826 (6.1%)	7479 (7.7%)	937 (8.7%)	956 (5.3%)	671 (14.6%)	1887 (10.8%)	428 (11.4%)	71 (2.4%)
SHD†	60096 (22.5%)	18896 (19.0%)	2085 (18.9%)	4167 (22.9%)	1130 (23.9%)	3601 (20.2%)	1024 (27.1%)	88 (2.9%)
Indeterminate	122181 (45.8%)	43296 (43.6%)	4820 (43.7%)	9278 (50.9%)	2449 (51.9%)	6420 (35.9%)	1939 (51.3%)	26 (0.9%)
SHD with Severe Valvular Disease‡	31311 (11.7%)	9005 (9.1%)	1067 (9.7%)	2189 (12.0%)	442 (9.4%)	1731 (9.7%)	466 (12.3%)	88 (2.9%)
Indeterminate	143515 (53.8%)	50463 (50.9%)	5548 (50.3%)	10795 (59.2%)	3016 (63.9%)	7612 (42.6%)	2410 (63.7%)	26 (0.9%)
LVSD (LVEF <40%)	25552 (9.6%)	6991 (7.0%)	821 (7.4%)	1772 (9.7%)	368 (7.8%)	1466 (8.2%)	386 (10.2%)	37 (1.2%)
Indeterminate	4787 (1.8%)	1506 (1.5%)	163 (1.5%)	307 (1.7%)	414 (8.8%)	137 (0.8%)	168 (4.4%)	2 (0.1%)
Moderate or Severe Left-sided Valvular Disease	42989 (16.1%)	14216 (14.3%)	1569 (14.2%)	3053 (16.8%)	924 (19.6%)	2640 (14.8%)	818 (21.6%)	55 (1.8%)

Indeterminate	93282 (35.0%)	32255 (32.5%)	3597 (32.6%)	6979 (38.3%)	1243 (26.3%)	4537 (25.4%)	1611 (42.6%)	27 (0.9%)
Moderate or Severe AR	10485 (3.9%)	3660 (3.7%)	392 (3.6%)	688 (3.8%)	224 (4.7%)	694 (3.9%)	188 (5.0%)	24 (0.8%)
Indeterminate	28962 (10.9%)	9345 (9.4%)	997 (9.0%)	2436 (13.4%)	472 (10.0%)	1204 (6.7%)	277 (7.3%)	12 (0.4%)
Moderate or Severe AS	10472 (3.9%)	3591 (3.6%)	426 (3.9%)	714 (3.9%)	226 (4.8%)	607 (3.4%)	236 (6.2%)	4 (0.1%)
Indeterminate	86106 (32.3%)	29757 (30.0%)	3312 (30.0%)	5958 (32.7%)	1167 (24.7%)	4343 (24.3%)	1252 (33.1%)	9 (0.3%)
Moderate or Severe MR	27850 (10.4%)	8902 (9.0%)	958 (8.7%)	2104 (11.5%)	627 (13.3%)	1670 (9.3%)	537 (14.2%)	30 (1.0%)
Indeterminate	21474 (8.1%)	6815 (6.9%)	759 (6.9%)	1222 (6.7%)	310 (6.6%)	823 (4.6%)	170 (4.5%)	15 (0.5%)
Severe Left-sided Valvular Disease	6321 (2.4%)	2188 (2.2%)	279 (2.5%)	400 (2.2%)	81 (1.7%)	281 (1.6%)	81 (2.1%)	0 (0%)
Indeterminate	110298 (41.4%)	37722 (38.0%)	4166 (37.8%)	8318 (45.6%)	1560 (33.1%)	5407 (30.3%)	2054 (54.3%)	0 (0%)
Severe AR	358 (0.1%)	119 (0.1%)	15 (0.1%)	27 (0.1%)	7 (0.1%)	12 (0.1%)	1 (0.0%)	0 (0%)
Indeterminate	28962 (10.9%)	9345 (9.4%)	997 (9.0%)	2436 (13.4%)	472 (10.0%)	1204 (6.7%)	277 (7.3%)	0 (0%)
Severe AS	3193 (1.2%)	1202 (1.2%)	155 (1.4%)	220 (1.2%)	47 (1.0%)	167 (0.9%)	59 (1.6%)	0 (0%)
Indeterminate	86106 (32.3%)	29757 (30.0%)	3312 (30.0%)	5958 (32.7%)	1167 (24.7%)	4343 (24.3%)	1252 (33.1%)	0 (0%)
Severe MR	2716 (1.0%)	857 (0.9%)	104 (0.9%)	146 (0.8%)	28 (0.6%)	94 (0.5%)	19 (0.5%)	0 (0%)
Indeterminate	21474 (8.1%)	6815 (6.9%)	759 (6.9%)	1222 (6.7%)	310 (6.6%)	823 (4.6%)	170 (4.5%)	0 (0%)
sLVH	1004 (0.4%)	305 (0.3%)	33 (0.3%)	133 (0.7%)	15 (0.3%)	60 (0.3%)	20 (0.5%)	6 (0.2%)
Indeterminate	121139 (45.4%)	40185 (40.5%)	4446 (40.3%)	8814 (48.4%)	2979 (63.1%)	5991 (33.5%)	2152 (56.9%)	0 (0%)

*Data are presented as median [interquartile range], or number (percentage%).
†Includes a composite of LVEF <40%, moderate or severe left-sided valvular disease, and sLVH.
‡Includes a composite of LVEF <50%, severe left-sided valvular disease, and sLVH.
Abbreviations: AR, aortic regurgitation; AS, aortic stenosis; ECG, electrocardiogram; LVEF, left ventricular ejection fraction; LVSD, left ventricular systolic dysfunction; sLVH, severe left ventricular hypertrophy; MR, mitral regurgitation; YNHH, Yale New Haven Hospital.

Table 2. Hazard Ratio of Screen-positive ECG Based on ADAPT-HEART for Predicting Incident Structural Heart Disease in Yale New Haven Hospital, Hospital-based External Validation Sites, and the UK Biobank

Model*	Covariates	Yale New Haven Hospital	Bridgeport Hospital	Greenwich Hospital	Lawrence + Memorial Hospital	Westerly Hospital	UK Biobank
Cox Proportional Hazard Model							
Model 1	**Screen-positive, Age, and Sex**	4.03 (3.71-4.37)	4.95 (4.45-5.5)	5.74 (4.64-7.11)	3.97 (3.45-4.58)	5.19 (3.42-7.88)	2.82 (2.13-3.74)
Model 2	**Model 1, HTN, DM**	3.74 (3.45-4.06)	4.52 (4.07-5.02)	5.06 (4.09-6.26)	3.52 (3.06-4.06)	4.83 (3.18-7.31)	2.75 (2.07-3.66)
Fine-Gray Subdistribution Hazard Model							
Model 3	**Model 1, Competing Risk of Death**	4.00 (3.65-4.38)	4.93 (4.39-5.54)	5.84 (4.62-7.39)	3.94 (3.38-4.59)	5.25 (3.46-7.97)	2.48 (1.89-3.26)
Model 4	**Model 2, Competing Risk of Death**	3.70 (3.39-4.05)	4.50 (4.01-5.05)	5.16 (4.08-6.52)	3.50 (3.01-4.07)	4.85 (3.21-7.34)	2.43 (1.85-3.20)

*Data are presented as HR (95% CI).
Abbreviations: DM, diabetes mellitus; HTN, hypertension.

Figure 1. Model Development for Detecting Multiple Structural Heart Diseases

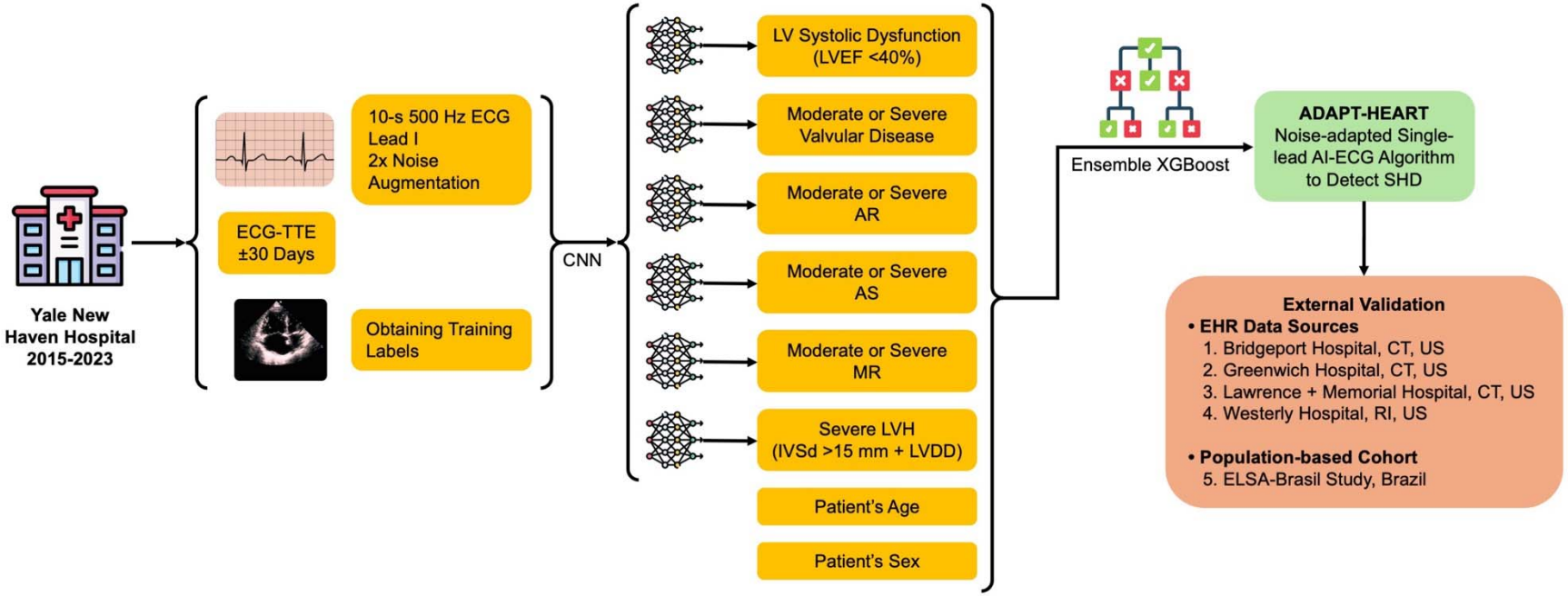

Abbreviations: ADAPT-HEART, AI Deep learning for Adapting Portable Technology in HEART disease detection; AR, aortic regurgitation; AS, aortic stenosis; CNN, convolutional neural network; ECG, electrocardiogram; LVH, left ventricular hypertrophy; IVSd, interventricular septal diameter at end-diastole; LVDD, left ventricular diastolic dysfunction; LVEF, left ventricular ejection fraction; MR, mitral regurgitation; XGBoost, extreme gradient boosting.

Figure 2. Receiver Operating Characteristic Curves of the ADAPT-HEART for Detecting (A) the Primary and (B) the Secondary Outcome Structural Heart Disease in the Held-out Test Set and External Validation Cohorts

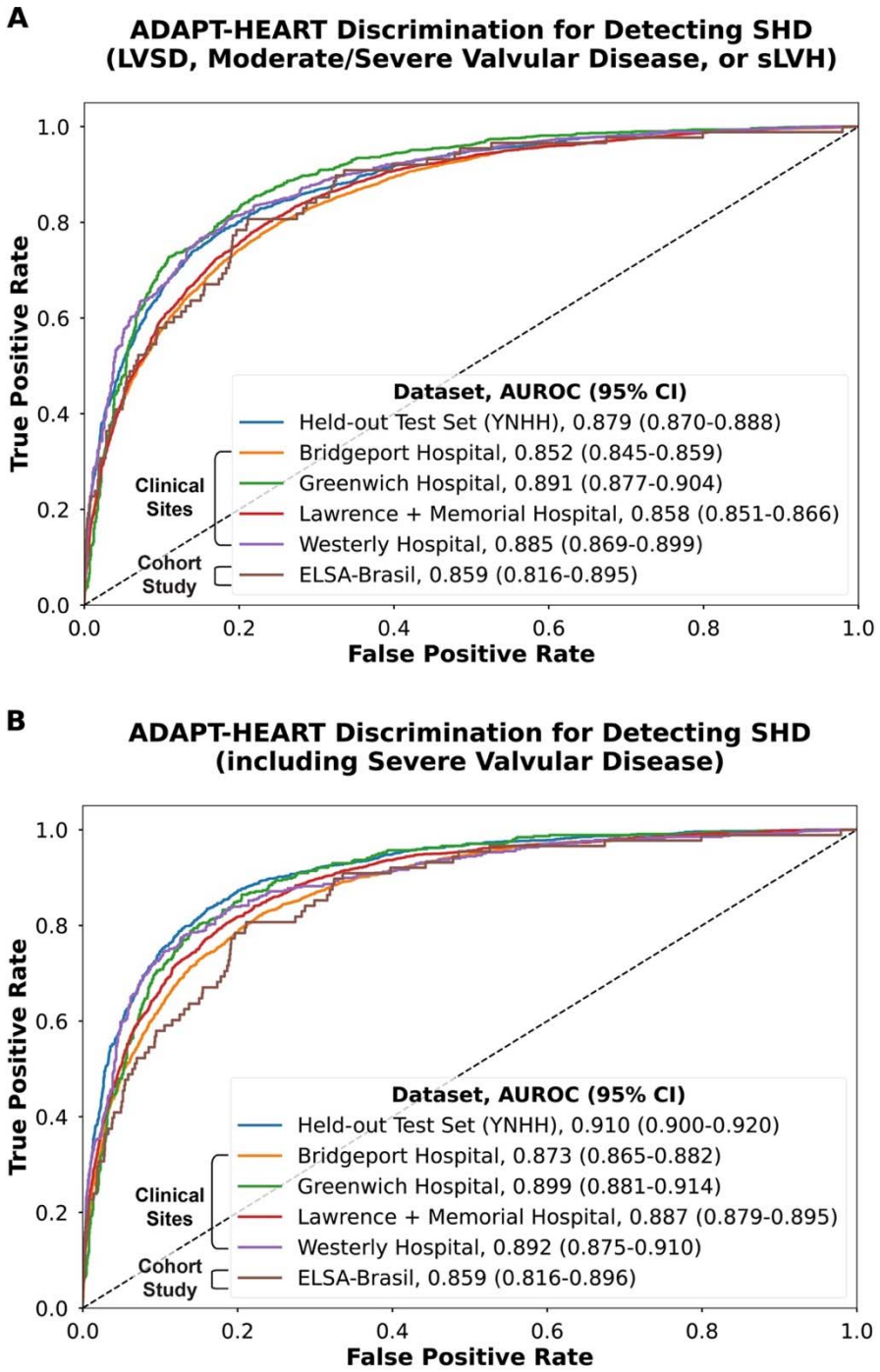

Abbreviations: ADAPT-HEART, AI Deep learning for Adapting Portable Technology in HEART disease detection; AUROC, area under the receiver operating characteristic curve; YNHH, Yale New Haven Hospital.

Figure 3. Model's Performance Measures Across Thresholds in the Held-out Test Set

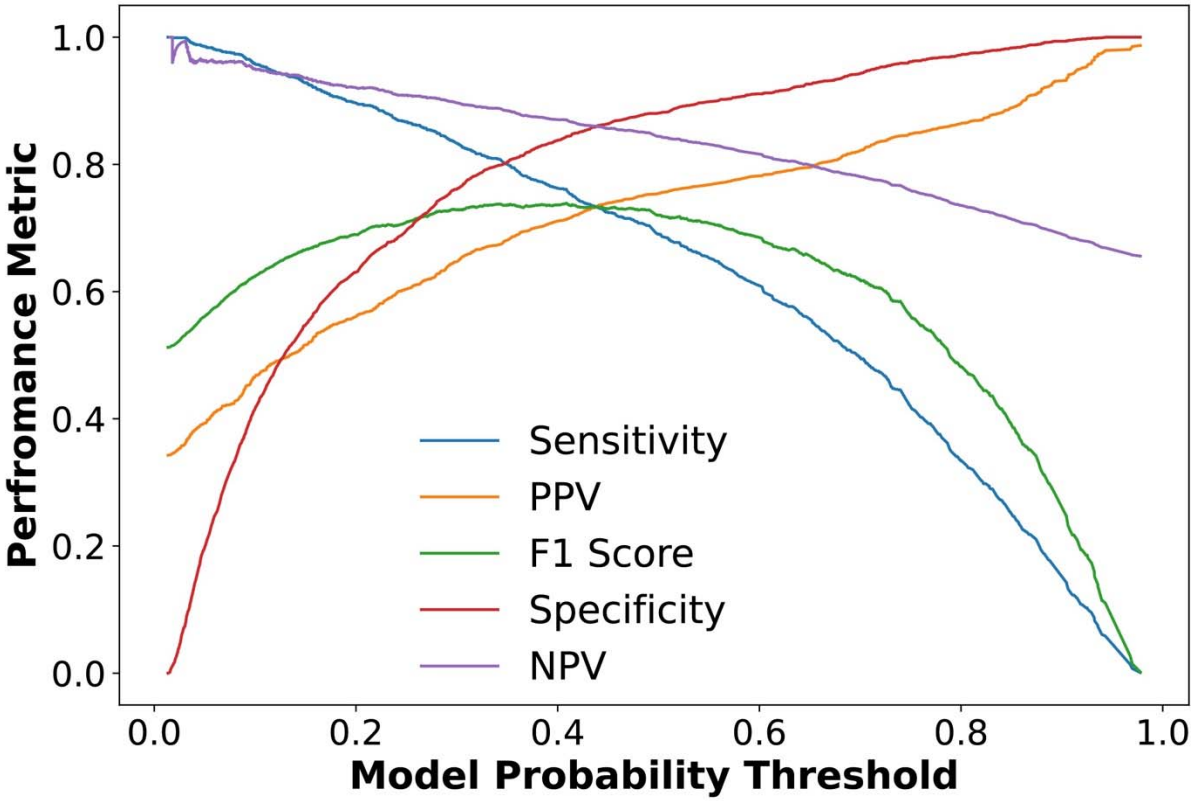

Abbreviations: NPV, negative predictive value; PPV, positive predictive value.

Figure 4. Model's Performance for Detecting Structural Heart Disease Across Key Demographic Subgroups in the Held-out Test Set

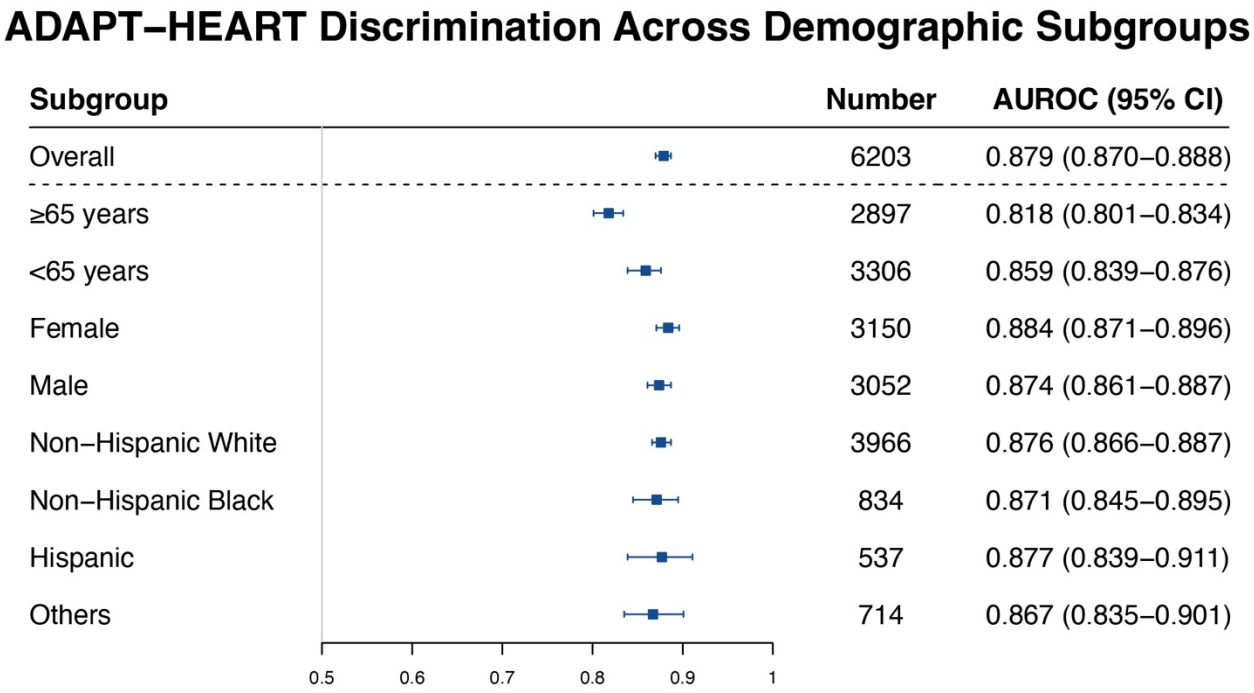

Abbreviations: AUROC, area under the receiver operating characteristic curve; CI, confidence interval.