medRxiv preprint doi: https://doi.org/10.1101/2024.07.19.24310710; this version posted July 19, 2024. The copyright holder for this preprint (which was not certified by peer review) is the author/funder, who has granted medRxiv a license to display the preprint in perpetuity. It is made available under a CC-BY 4.0 International license .

Comparing different approaches of modelling the effects of temperature and rainfall on malaria transmission in high and low transmission settings

Gladstone T. Madito[1*] and Sheetal P. Silal[1,2]

[1] Modelling And Simulations Hub, Africa (MASHA), Department of Statistical Sciences, University of Cape Town, Cape Town, South Africa.
[2] Centre for Global Health, Nuffield Department of Medicine, University of Oxford, Oxford, United Kingdom.

*Corresponding author(s). E-mail(s): mdtgla001@myuct.ac.za;

Abstract

Background: Malaria transmission is primarily limited to tropical regions where environmental conditions are conducive for the development of *Plasmodium* parasites and *Anopheles* mosquitoes. Adequate rainfall provides breeding sites, while suitable temperatures facilitate mosquito life-cycles and parasite development. Evaluating the efficacy of vector control interventions, such as insecticide treated nets and indoor residual spraying, is crucial to determine their effectiveness in reducing malaria transmission. In this context, mathematical modeling offers a valuable framework for understanding the impacts of these meteorological factors on malaria transmission and evaluating the efficacy of vector control interventions.

Methods: We develop a vector-host compartmental mathematical model to compare three published approaches to incorporating weather influences on malaria transmission. The first approach examines mosquito biting behavior and mortality rates in larval and adult stages. The second focuses on temperature effects on mosquito life-cycle characteristics during aquatic stages. The third considers how temperature and rainfall influence adult mosquito behavior, environmental carrying capacity, and survival during aquatic stages. The model is simulated with varying intervention efficacy for vector control to identify differences in predicted malaria incidence, prevalence, cases averted, and transmission dynamics.

NOTE: This preprint reports new research that has not been certified by peer review and should not be used to guide clinical practice.

medRxiv preprint doi: https://doi.org/10.1101/2024.07.19.24310710; this version posted July 19, 2024. The copyright holder for this preprint (which was not certified by peer review) is the author/funder, who has granted medRxiv a license to display the preprint in perpetuity. It is made available under a CC-BY 4.0 International license .

Results: Simulation results for the same initial conditions and no vector control, indicate that prevalence stabilizes around 500 cases per 1000 for all modelling approaches. Increasing vector control efficacy significantly reduces prevalence for all approaches, with the first approach showing the most considerable reduction and the longest delay to the start of the transmission season. While malaria incidence peaks are highest for the second approach, more cases are averted when the first approach is adopted, followed by the second, then the third.

Conclusion: Adopting an approach that accounts for how rainfall influences mosquito environmental capacity and the temperature regulation of parasite development, but excludes aquatic stage development, limits the number of mosquitoes available to transmit the disease. Investigating temperature regulation of mosquito development and survival provides a detailed and reliable description of mosquito population dynamics but projects higher peaks in malaria incidence. In contrast, the approach that examines how temperature influences the biting rates, larval mortality, and adult mosquito mortality projects lower peaks but also demonstrates significant reductions in incidence and prevalence as vector control efficacy improves. While this approach offers a simplified model of the dynamics, they may underestimate actual mosquito population trends, thereby impacting the effectiveness of modeled interventions.

Keywords: Temperature, Rainfall, *Plasmodium*, *Anopheles*, Mathematical Modelling, Vector Control

Background

Malaria is an infectious disease caused by *Plasmodium* parasites transmitted to humans through the bites of infected female *Anopheles* mosquitoes [1]. This disease poses a significant public health concern, impacting the health and livelihoods of individuals in tropical regions worldwide [2, 3]. Malaria remains a significant cause of mortality, with around half a million deaths attributed to the disease annually [4–6]. The World Health Organization (WHO) categorizes the prevalence of malaria in a country based on the number of reported cases per population at risk. Countries with lower than 100 cases per 1000 population per year are classified as low transmission, while those reporting more than 450 cases per 1000 population per year are considered high transmission settings [7]. To combat malaria transmission, several intervention strategies have been implemented. These include case management through effective treatment with artemisinin-based combination therapies (ACTs), and vector control measures such as indoor residual spraying (IRS) of households with insecticides, and widespread distribution of long-lasting insecticide-treated nets (LLINs) [8–15]. These interventions play a crucial role in reducing the incidence of malaria and improving public health outcomes in affected areas. Despite these efforts, seasonal outbreaks frequently occur due to favourable weather conditions and reduced efficacy of interventions. Factors such as limited mosquito abundance or changes in mosquito breeding, survival, and behaviour influenced by temperature and rainfall contribute to these

medRxiv preprint doi: https://doi.org/10.1101/2024.07.19.24310710; this version posted July 19, 2024. The copyright holder for this preprint (which was not certified by peer review) is the author/funder, who has granted medRxiv a license to display the preprint in perpetuity. It is made available under a CC-BY 4.0 International license .

challenges [2, 16–18]. Malaria transmission is primarily restricted to tropical regions where temperatures are conducive for both parasite and mosquito development, and adequate rainfall to facilitate the availability of breeding sites for mosquitoes [8–10]. Increases in temperature can cause mosquitoes to mature faster, giving them more time to spread the disease, and similarly, the malaria parasite matures more quickly at warmer temperatures. However, if temperatures rise too high, neither the mosquitoes nor the malaria parasite can survive [2, 5, 6, 11]. Additionally, adequate rainfall generates sufficient habitats for mosquito larvae to grow, leading to abundant adult mosquitoes capable of spreading the disease. Whereas, limited rainfall results in fewer breeding sites and heavy rainfall leads to flushing out of mosquito larvae, which results in reduced mosquito populations available to spread the disease [11, 13–15].

It is essential to consider the impact of weather factors like temperature and rainfall on mosquito development, survival, and behavior is crucial when implementing vector control measures to manage disease outbreaks. Accurate seasonal weather forecasts of these factors facilitate the use of malaria models as early warning systems in endemic regions. These models can also assess potential changes in malaria prevalence due to seasonal weather variations. Malaria transmission models are critical in understanding the transmission dynamics and evaluating the effectiveness of intervention strategies. Several mathematical models incorporating empirical data and statistical approaches associate variations in meteorological factors with malaria incidence [4, 12, 16, 18–21]. While extensive research into the influence of temperature variability on malaria transmission has been conducted, rainfall has often been relegated to a secondary factor, despite efforts to develop suitable models that account for the combined impact of temperature and rainfall on vector and parasite development [2, 5, 22, 23]. The significance of these models has grown because while statistical models have been valuable in revealing relationships between environmental variables and transmission intensity, process-based mathematical models offer a more explanatory insight into the balance between internal factors (resulting from biological processes) and external factors (such as changes in environmental variables) that drive transmission. Dynamical models are essential because they account for the biological processes driving malaria transmission within an environment that changes dynamically over different time scales [20, 24–27]. Furthermore, a dynamic model is crucial for capturing invasion dynamics and effectively forecasting the emergence of new outbreaks. This includes scenarios where changes in temperature and rainfall patterns may render previously unsuitable areas conducive to transmission, as well as instances of human migration or mosquito spread into previously unaffected regions [28–31].

A mechanistic model calibrated with weather data from multiple regions in Africa found that malaria infection tends to rise within temperatures ranging from 16 to 25°C, and decreases within the 25 to 28°C range [27]. In contrast, a study utilizing a climate-based vector-host model, which considers the aquatic stages in the mosquito lifecycle, indicates that transmission is optimized in the temperature range of 21 to 25°C, accompanied by 95 to 125 mm of rainfall [23]. A vector-host modeling approach

medRxiv preprint doi: https://doi.org/10.1101/2024.07.19.24310710; this version posted July 19, 2024. The copyright holder for this preprint (which was not certified by peer review) is the author/funder, who has granted medRxiv a license to display the preprint in perpetuity. It is made available under a CC-BY 4.0 International license .

was employed to investigate the dynamics of malaria transmission, specifically focusing on the aquatic stages of mosquito vectors [11]. The model categorized larvae and adult mosquitoes based on their behaviors such as biting, resting, and host-seeking, while also considering the impact of ambient air temperature and water body temperature on mosquito breeding success. By quantifying the seasonality of *Anopheles arabiensis* population densities across the region, the model accurately simulated the observed trends in larval density [1, 2, 11]. This alignment with laboratory experiments highlight the robustness of the model in capturing real-world conditions. In contrast, models that neglect the aquatic stages of mosquito vectors often fail to account for these crucial aspects of malaria transmission dynamics [4, 22, 31, 32].

While mechanistic models provide a valuable framework for understanding malaria dynamics, various approaches have been developed to incorporate the effects of temperature and rainfall on malaria transmission dynamics, focusing on different critical stages of transmission. Lou and Zhao [22], developed a weather-based model that examines malaria transmission by focusing on an age-structured vector population with periodic birth rates. Their model integrates factors such as temperature-dependent egg production, biting rates, and mortality rates of both aquatic and adult mosquitoes. Similarly, Abiodun et al. [11], employed a weather-based mathematical model to investigate the impact of temperature on mosquito development and behaviors. This model incorporates temperature-dependent factors such as egg production, as well as the development and mortality rates of eggs, larvae, and pupae, alongside adult mosquito activities such as resting, mating, and host-seeking behaviors. Furthermore, Abiodun et al. [2], utilized a weather-based mathematical model to explore the combined effects of temperature and rainfall on malaria transmission dynamics. Their model includes temperature and rainfall-dependent mosquito recruitment, infection dynamics between humans and mosquitoes, and explores the impact of interventions like insecticide spraying.

While these studies have explored the impact of temperature and rainfall on malaria transmission, Lou and Zhao [22] does not explicitly consider the aquatic stages, instead treating the combined aquatic population and assuming that its mortality rate is equivalent to that of larvae. Additionally, Abiodun et al. [11] explicitly accounts for these stages but focuses solely on mosquito population dynamics, neglecting transmission. Moreover, Abiodun et al. [2] includes the effects of rainfall but also neglects the aquatic population. These studies each focus on different aspects of malaria dynamics, as such, it is essential to identify the most appropriate approach for investigating mosquito population dynamics or guiding resource allocation and decision-making for malaria control and prevention under varying weather conditions. This study aims to develop a compartmental mathematical model to explore how adopting each of these approaches affects transmission dynamics as vector control efficacy varies. Additionally, the research compares model projections to determine the most effective approach for modeling the impact of weather on malaria transmission or mosquito population dynamics in different settings and how these approaches can inform evidence-based strategies for vector control.

medRxiv preprint doi: https://doi.org/10.1101/2024.07.19.24310710; this version posted July 19, 2024. The copyright holder for this preprint (which was not certified by peer review) is the author/funder, who has granted medRxiv a license to display the preprint in perpetuity. It is made available under a CC-BY 4.0 International license .

Methods

This chapter provides a detailed description of the mathematical model and approaches adopted to investigate the impact of temperature and rainfall on malaria transmission in high and low transmission settings. We construct a compartmental model by grouping individuals with similar characteristics related to development stage, risk of infection, infectiousness, treatment seeking behaviour and recovery from disease into compartments within mosquito and human populations. The model diagram (see Figure 1) illustrates the transmission of malaria between vectors mosquito and human hosts, accounting for the aquatic stages of the mosquito life-cycle which includes eggs (E_a) that hatch into larva (L_a), which develop into pupa (P_a) that emerge as adult mosquitoes. The population of adult mosquitoes is grouped into mosquitoes susceptible to malaria infection (S_m), infected mosquitoes that cannot transmit infection to humans (E_m), as well as infectious mosquitoes that can transmit infection to humans (I_m). The host population is grouped into individuals at risk of infection (S), infected humans that cannot transmit infection to mosquitoes (E), and infected people that can transmit infection to mosquitoes but either do not show symptoms (A), show uncomplicated symptoms (I_u) or are experiencing severe symptoms (I_s). Furthermore, individuals treated for uncomplicated symptoms (T_u) or severe symptoms (T_s) and individuals that have recovered from disease (R) are also considered.

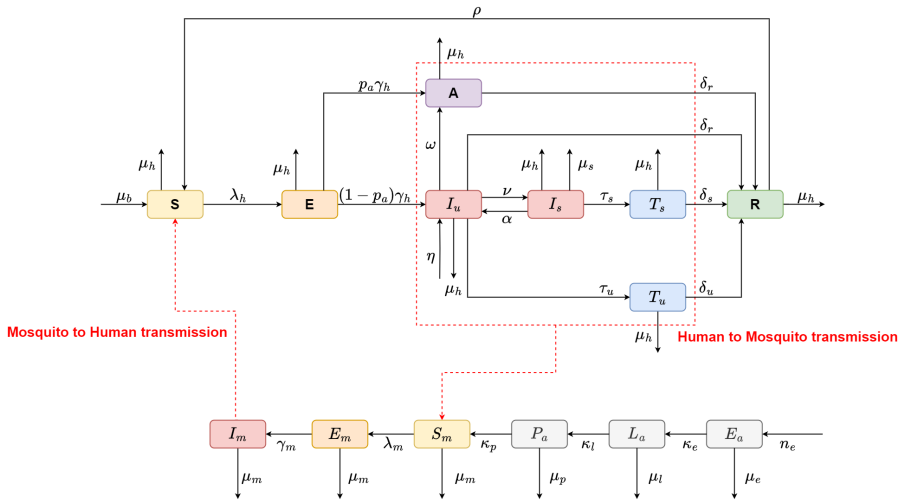

Fig. 1: Transmission flow diagram illustrating the development of mosquitoes from egg to larvae then pupae and the transmission of malaria between a human and mosquito population.

We adopt the technique used in Korsah et al. [33], to investigate the effectiveness of vector control intervention aimed at preventing transmission between mosquitoes

medRxiv preprint doi: https://doi.org/10.1101/2024.07.19.24310710; this version posted July 19, 2024. The copyright holder for this preprint (which was not certified by peer review) is the author/funder, who has granted medRxiv a license to display the preprint in perpetuity. It is made available under a CC-BY 4.0 International license .

and human. Vector control coverage is modelled as a compartment where coverage grows with intervention deployment and decays with declining operational efficacy (see Equation 15). The mosquito development and disease pathways illustrated in the model diagram as well as the intervention compartment are represented by the following system of ordinary differential equations (ODEs) describing malaria transmission between vector mosquitoes and human hosts. Full descriptions of the parameters and compartments are provided in Table 1 and 2.

Aquatic mosquito population:

$$\frac{dE_a(t)}{dt} = n_e\theta\left(1 - \frac{M(t)}{K_e}\right)M(t) - \kappa_e E_a(t) - \mu_e E_a(t) \tag{1}$$

$$\frac{dL_a(t)}{dt} = \kappa_e E(t) - \kappa_l L_a(t) - \mu_l L_a(t) \tag{2}$$

$$\frac{dP_a(t)}{dt} = \kappa_l L_a(t) - \kappa_p P_a(t) - \mu_p P_a(t) \tag{3}$$

Adult mosquito population:

$$\frac{dS_m(t)}{dt} = \kappa_p P_a(t) - \lambda_m S_m(t) - \mu_m S_m(t) \tag{4}$$

$$\frac{dE_m(t)}{dt} = \lambda_m S_m(t) - \gamma_m E_m(t) - \mu_m E_m(t) \tag{5}$$

$$\frac{dI_m(t)}{dt} = \gamma_m E_m(t) - \mu_m I_m(t) \tag{6}$$

Human population:

$$\frac{dS(t)}{dt} = \mu_h P(t) - \lambda_h S(t) + \rho R(t) - \mu_h S(t) \tag{7}$$

$$\frac{dE(t)}{dt} = \lambda_h S(t) - \gamma_h E(t) - \mu_h E(t) \tag{8}$$

$$\frac{dA(t)}{dt} = p_a\gamma_h E(t) + \omega I_u(t) - \delta_r A(t) - \mu_h A(t) \tag{9}$$

$$\frac{dI_u(t)}{dt} = \eta + (1 - p_a)\gamma_h E(t) - \omega I_u(t) - \nu I_u(t) - \delta_r I_u(t) - \tau_u I_u(t) - \mu_h I_u(t) \tag{10}$$

$$\frac{dI_s(t)}{dt} = \nu I_u(t) - \alpha I_s(t) - \tau_s I_s(t) - \mu_s I_s(t) - \mu_h I_s(t) \tag{11}$$

$$\frac{dT_u(t)}{dt} = \tau_u I_u(t) - \delta_u T_u(t) - \mu_h T_u(t) \tag{12}$$

$$\frac{dT_s(t)}{dt} = \tau_s I_s(t) - \delta_s T_s(t) - \mu_h T_s(t) \tag{13}$$

medRxiv preprint doi: https://doi.org/10.1101/2024.07.19.24310710; this version posted July 19, 2024. The copyright holder for this preprint (which was not certified by peer review) is the author/funder, who has granted medRxiv a license to display the preprint in perpetuity. It is made available under a CC-BY 4.0 International license .

$$\frac{dR(t)}{dt} = \delta_r A(t) + \delta_r I_u(t) + \delta_u T_u(t) + \delta_s T_s(t) - \rho R(t) - \mu_h R(t) \tag{14}$$

Intervention coverage:

$$\frac{dV(t)}{dt} = \zeta - \sigma V(t) \tag{15}$$

where ζ represents the annual rate of vector control distribution/coverage and σ determines the decay rate of intervention coverage. The forces of infection in the mosquito (λ_m) and human (λ_h) populations for the model are defined respectively by Equation 16 and 17.

$$\lambda_m = \frac{ab}{1 + \xi V(t)} \times \frac{I_h(t)}{P(t)} \tag{16}$$

$$\lambda_h = \frac{ac}{1 + \xi V(t)} \times \frac{M(t)}{P(t)} \times \frac{I_m(t)}{M(t)} \tag{17}$$

where ξ determines the efficacy of vector control interventions.

The transmission model is parameterized with values provided and described in the parameters table (see Table 2). The total number of mosquito eggs laid by a population of female mosquitoes is represented by n_e, with these eggs are oviposited into water bodies by individual female mosquitoes at a rate of θ and are cleared at a rate of μ_e. Mosquito eggs hatch into larvae at a rate of κ_e, and competition for nutrients leads to larva dying at a rate of μ_l, whereas those that survive develop into pupae at a rate of κ_l. Clearance of pupa from water bodies occurs at a rate of μ_p and those that survive emerges a adult mosquitoes at a rate of κ_p. Adult mosquitoes die at a rate of μ_m and susceptible mosquitoes become infected at a rate of λ_m, whereas the malaria parasite develops within infected mosquitoes at a rate of γ_m.

We consider recruitment of individuals into the host population occurs at a birth rate of μ_b, with the life expectancy of humans given by $\frac{1}{\mu_h}$. Susceptible humans become infected through infectious mosquito bites at a rate of λ_h and malaria parasites development within individuals exposed to infection occurs at a rate of γ_h. The proportion of infectious individuals that do not show symptoms is given by pa and the loss of uncomplicated symptoms occurs at a rate of ω. Infectious people with uncomplicated symptoms receive treatment at a rate of τ_u, whereas those that do not receive treatment recover from disease at a rate of δ_r. Infected people experience severe malaria symptoms at a rate of ν and are lost at a rate of α. People with severe symptoms receive treatment at a rate of τ_s but suffer malaria induced death at rate of μ_s. People that have been treated for uncomplicated or severe symptoms recover from disease at rates δ_u and δ_s, respectively. Finally, recovered people are considered to possess temporary immunity acquired from infection and lose this immunity to become susceptible to infection again at a rate of ρ.

medRxiv preprint doi: https://doi.org/10.1101/2024.07.19.24310710; this version posted July 19, 2024. The copyright holder for this preprint (which was not certified by peer review) is the author/funder, who has granted medRxiv a license to display the preprint in perpetuity. It is made available under a CC-BY 4.0 International license .

Symbol	Description
E_a	Mosquito eggs
L_a	Mosquito larvae
P_a	Mosquito pupae
S_m	Mosquitoes susceptible to malaria infection
E_m	Infected mosquitoes that cannot transmit malaria parasites to humans
I_m	Infected mosquitoes that can transmit malaria parasites to humans through biting
S	Humans at risk of malaria infection
E	Infected humans that cannot transmit malaria parasites to mosquitoes when bitten
A	Infectious humans without symptoms (asymptomatics)
I_u	Infectious humans experiencing uncomplicated symptoms
I_s	Infectious humans with severe malaria symptoms
T_u	Patients treated for uncomplicated symptoms
T_s	Patients treated for severe symptoms
R	Recovered patients with temporary immunity acquired from infection
V	Vector control coverage

Table 1: Table of vector-host and intervention compartments of the model.

Symbol	Description	Value	Source
n_e	Average number of eggs laid	12	[2, 21, 34]
κ_e	Egg hatching rate	0.30	[11, 34]
μ_e	Egg mortality rate	0.10	[11, 34]
κ_l	Larval development rate	0.06	[11, 34]
μ_l	Larval mortality rate	1.0	[11, 34]
κ_p	Pupal development rate	0.70	[11, 34]
μ_p	Pupal mortality rate	0.40	[11, 34]
μ_m	Mortality rate in adult mosquitoes	0.104	[32]
γ_m	Mosquito incubation rate	0.1	[32]
μ_b	Birth rate of humans	0.03	[2, 34]
μ_h	Mortality rate in humans	0.01	[2, 34]
δ_u	Recovery rate of humans treated for uncomplicated symptoms	0.03	[2, 21, 32]
δ_s	Recovery rate of humans treated for severe symptoms	0.02	[2, 21, 32]
γ_h	Incubation rate within humans	0.08	[2, 21, 32]
ν	Development rate of severe symptoms	0.05	[32]
τ_u	Treatment rate for uncomplicated symptoms	0.1	[11]
ω	Recovery rate from severe symptoms	0.2	[32]
τ_s	Treatment rate for severe symptoms	0.15	[11]
μ_s	Disease-induced mortality rate	0.05	[21, 32]
ρ	Loss of temporary immunity	0.1	[32]
ζ_1	IRS spray coverage rate	1/365	-
ζ_2	ITN distribution rate	1/365	-
σ_1	IRS operational efficacy	2/365	-
σ_2	ITN operational efficacy	1/1095	-

Table 2: Table of parameter descriptions and values (per day) used to simulate the model.

We conduct our comparative study by using formulations for temperature and rainfall dependent model parameters derived in studies by Abiodun et al. [2, 11], Lou and Zhao [22]. Although the following approaches are adopted to investigate the effects of temperature and rainfall on malaria dynamics, different aspects of malaria

medRxiv preprint doi: https://doi.org/10.1101/2024.07.19.24310710; this version posted July 19, 2024. The copyright holder for this preprint (which was not certified by peer review) is the author/funder, who has granted medRxiv a license to display the preprint in perpetuity. It is made available under a CC-BY 4.0 International license .

transmission and the mosquito life-cycle are considered.

Approach A: Temperature regulated mosquito mortality and biting behaviour

We adopt the approach of Traoré et al. [1], Lou and Zhao [22] by modelling aspects of the mosquito life-cycle that are crucial to mosquito survival and malaria transmission. How many eggs survive the larval stage of mosquito life-cycle to become pupae influences the growth of the adult mosquito population which is regulated through fluctuating mortality at different temperatures. Mosquitoes that survive into adulthood and come into contact with humans drive transmission through biting controlled by seasonal changes in temperature. It is assumed that mosquito larvae and adult mosquitoes die at temperature dependent mortality rates (that is $\mu_l(T)$ and $\mu_m(T)$ for larvae and adult mosquitoes, respectively) and the biting rate, $a(T)$, of adult mosquitoes are determined by the following functions (see Figure A2 in Appendix A for plots of these functions):

$$a(T) = \frac{1}{107.204 - 13.3523T + 0.677509T^2 - 0.0159732T^3 + 0.000144876T^4} \tag{18}$$

$$\mu_m(T) = \frac{3.04}{30.4} + \frac{29.564}{30.4}\exp\left(-\frac{T-278}{2.7035}\right) \tag{19}$$

$$\mu_l(T) = \frac{1}{-4.4 + 1.31T - 0.03T^2} \tag{20}$$

Approach B: Temperature sensitive mosquito life-cycle characteristics

We extend on the approach of Abiodun et al. [11], where the temperature dependence of mosquito characteristics related to the development of eggs, larvae and pupae are explicitly considered, with the inclusion mosquito biting behaviour described in Abiodun et al. [2]. Here we consider the total number of eggs laid by a population of female mosquitoes $n_e(T)$, the daily rate of egg oviposition $\theta(T)$, the development rates of eggs $\kappa_e(T)$, larvae $\kappa_l(T)$, and pupae $\kappa_p(T)$, the mortality rates of eggs $\mu_e(T)$, larvae $\mu_l(T)$, and pupae $\mu_p(T)$, as well as the biting rate of adult mosquitoes $a(T)$, are expressed with the following temperature dependent functions (see Figure A3 in Appendix A for plots of these functions):

$$n_e(T) = -0.61411T^3 + 38.93T^2 - 801.27T + 5391.4 \tag{21}$$

$$\theta(T) = 0.00054T^3 - 0.038T^2 + 0.88T \tag{22}$$

$$\mu_m(T) = -0.000091T^3 + 0.059T^2 + 1.3T + 9.9 \tag{23}$$

$$\kappa_e(T) = 0.012(T+2)^3 - 0.81(T+2)^2 + 18(T+2) - 135.93 \tag{24}$$

medRxiv preprint doi: https://doi.org/10.1101/2024.07.19.24310710; this version posted July 19, 2024. The copyright holder for this preprint (which was not certified by peer review) is the author/funder, who has granted medRxiv a license to display the preprint in perpetuity. It is made available under a CC-BY 4.0 International license .

$$\kappa_l(T) = -0.002(T+2)^3 + 0.14(T+2)^2 - 3(T+2) + 22 \tag{25}$$
$$\kappa_p(T) = -0.0018(T+2)^3 + 0.12(T+2)^2 - 2.7(T+2) + 20 \tag{26}$$
$$\mu_e(T) = 0.0033(T+2)^3 - 0.23(T+2)^2 + 5.3(T+2) - 40 \tag{27}$$
$$\mu_l(T) = 0.00081(T+2)^3 - 0.056(T+2)^2 + 1.3(T+2) - 8.6 \tag{28}$$
$$\mu_p(T) = 0.0034(T+2)^3 - 0.22(T+2)^2 - 4.9(T+2) - 34 \tag{29}$$
$$a(T) = 0.000203(T^2 - 11.7T)\sqrt{42.3 - T} \tag{30}$$

Approach C: Temperature and rainfall dependent aquatic mosquito survival and environmental capacity

This last approach is presented in Abiodun et al. [2], where the environmental carrying capacity of mosquito eggs $K_e(R)$, and the survival probabilities of eggs $p_e(R)$, larvae $p_l(R,T)$, and pupae $p_p(R)$, depend on rainfall. The rainfall threshold for flushing out of aquatic mosquitoes due to heavy rainfall is denoted by R_l. Furthermore, the biting rate $a(T)$, mortality rate of aquatic and adult mosquitoes ($\mu_l(T)$ and $\mu_m(T)$, respectively), development period of larvae $t_l(T)$, and the incubation period of malaria parasites within mosquitoes $\gamma_m(T)$, are assumed to be temperature dependent. The formulations for parameters representing these characteristics are given as follows (see Figure A4 in Appendix A for plots of these functions):

$$a(T) = 0.000203(T^2 - 11.7T)\sqrt{42.3 - T} \tag{31}$$
$$\mu_m(T) = \frac{1}{-4.4 + 1.31T - 0.03T^2} \tag{32}$$
$$\mu_l(T) = 0.0025T^2 - 0.094T + 1.0257 \tag{33}$$
$$\gamma_m(T) = \frac{T - 16}{111} \tag{34}$$
$$K_e(R) = \frac{P_A}{P_E}R \tag{35}$$
$$t_l(T) = \frac{1}{0.0554T - 0.06737} \tag{36}$$
$$p_e(R) = \left(\frac{4\max p_e}{R_l^2}\right)R(R_l - R) \tag{37}$$
$$p_l(R,T) = \left(\frac{4\max p_l}{R_l^2}\right)R(R_l - R)\exp\left(-\frac{1}{t_l}\right) \tag{38}$$
$$p_p(R) = \left(\frac{4\max p_p}{R_l^2}\right)R(R_l - R) \tag{39}$$

where P_A, P_E, $\max p_e$, $\max p_l$, and $\max p_p$ represent the carrying capacity conversion factor, decay rate, and the maximum survival probabilities of mosquito eggs, larvae and pupae, respectively.

medRxiv preprint doi: https://doi.org/10.1101/2024.07.19.24310710; this version posted July 19, 2024. The copyright holder for this preprint (which was not certified by peer review) is the author/funder, who has granted medRxiv a license to display the preprint in perpetuity. It is made available under a CC-BY 4.0 International license .

Results

This study uses historical mean monthly surface air temperature and precipitation datasets for South Africa for the 1950 and 2022 period obtained from the Climate Change Knowledge Portal (CCKP) repository. The temperature and rainfall trends for the period investigated in the study are presented in Appendix A. The model is simulated with the same initial conditions and baseline parameters across the three modelling approaches A, B, and C, examining scenarios where vector control measures are implemented at varying efficacy levels. Annual indoor residual spraying (IRS) and distribution of insecticide treated nets (ITNs) are considered as the primary vector control interventions for preventing contact between mosquitoes and humans as discussed in Korsah et al. [33]. We explore scenarios with intervention efficacy parameter, ξ , ranging from 0 %, 25 %, 50 %, 75 % to 90 % to investigate the overall effectiveness of vector control in preventing transmission under varying temperatures and rainfall. The model is simulated for 12 years for the system to reach a steady state and the last 6 years (year 12 to 18) of the simulation are considered for analysis. We compare the effects of temperature and rainfall on malaria transmission by measuring the number of new cases (incidence), population infected with disease (prevalence), cases averted (total uncomplicated cases compared to the baseline - 0 % efficacy) through vector control, and exploring equilibrium state disease transmission.

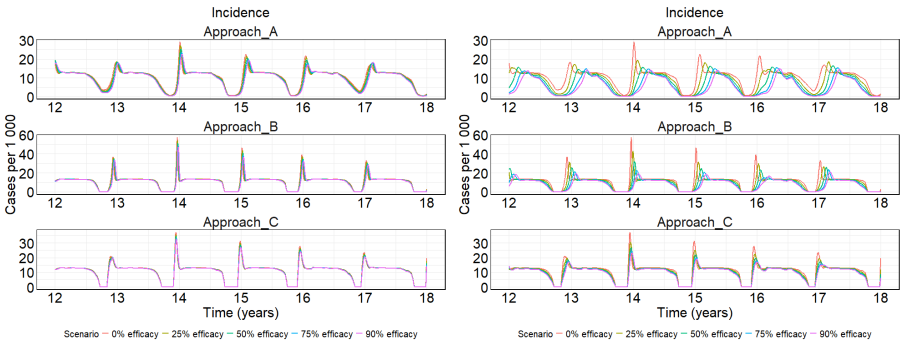

(a) Incidence under routine IRS. (b) Incidence under ITN distribution.

Fig. 2: Projected malaria incidence in cases per 1000, for a period of 6 years using different weather modelling approaches under vector control intervention.

IRS efficacy improves the protection provided to susceptible populations against malaria infection by killing mosquitoes and deterring mosquitoes from entering sprayed households. Figure 2a shows that all three approaches project that the peak in malaria incidence is reduced with increased IRS efficacy, however, Approach B projects higher incidence with new infections generally above 30 cases per 1000. Malaria incidence is seasonal with an initial spike in infections as a result of increasing temperatures contributing to increased biting, and faster parasite and mosquitoes

medRxiv preprint doi: https://doi.org/10.1101/2024.07.19.24310710; this version posted July 19, 2024. The copyright holder for this preprint (which was not certified by peer review) is the author/funder, who has granted medRxiv a license to display the preprint in perpetuity. It is made available under a CC-BY 4.0 International license .

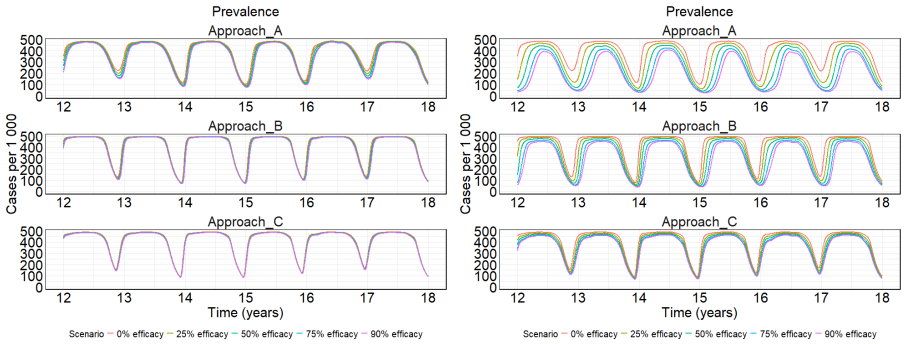

(a) Prevalence under routine IRS. (b) Prevalence under ITN distribution.

Fig. 3: Projected malaria prevalence in cases per 1000, for a period of 6 years using different weather modelling approaches under vector control intervention.

development, which is followed by sustained transmission post the peak in cases. Due to lower temperatures leading to reduced survival and slowed development of mosquitoes, cases are generally low during the winter season with zero transmission projected by Approach B and C. In contrast, Approach A projects that transmission continues during this period as it only accounts for the survival of larvae and adult mosquitoes but does not account for development. It is also for this reason that Approach A shows some variability in cases during the period of sustained transmission compared to the other approaches. On the other hand, ITN efficacy improves the protection provided to susceptible populations against malaria infection by killing mosquitoes and creating a barrier to prevent contact indoors between mosquitoes and individuals residing in sprayed households. Figure 2b shows that the size of the peak in malaria incidence is reduced and the timing of the peak is delayed with increasing ITN efficacy for all approaches. Furthermore, the length of the transmission season is reduced, with Approach A showing the largest reduction and delay in the timing of the peak compared to Approach B and C. Approach B projects a higher peaks (ranging around 60 to 20 cases per 1000) in malaria incidence followed by Approach C (above 10 to around 35 cases per 1000) than Approach A (between 30 and around 15 cases per 1000). Although all three approaches project a decline cases when temperatures drop, Approach B and Approach C suggest that transmission stops regardless of ITN efficacy level, however, Approach A project that transmission persists, with incidence falling towards zero cases per 1000 as ITN efficacy improves.

Malaria transmission is often driven by a reservoir of infections within the population which contributes to the prevalence of disease. Figure 3a shows that all three modelling approaches project a prevalence around 500 cases per 1000 for the same set of parameter values, reflective of a high transmission setting. Although there is a seasonal spike in malaria incidence (new infections) and Approach A projecting higher cases compared to other approaches, all three modelling approaches project that malaria remains prevalent within the population for an extended period of the

medRxiv preprint doi: https://doi.org/10.1101/2024.07.19.24310710; this version posted July 19, 2024. The copyright holder for this preprint (which was not certified by peer review) is the author/funder, who has granted medRxiv a license to display the preprint in perpetuity. It is made available under a CC-BY 4.0 International license .

year, with infections reducing to about 100 cases per 1000 when temperature decline. Despite all three approaches showing a differences in projected prevalence as IRS efficacy increases, Approach A shows the most reductions with increasing efficacy, followed by Approach C then Approach B. Although ITNs are operationally effective for longer than IRS, Figure 3b similarly shows that the projected prevalence peaks around 500 case per 1000. Approach A projects that the prevalence of malaria ranges between 500 and 400 cases per 1000 with increasing ITN efficacy post the transmission season. In contrast, Approach B and Approach C project that malaria prevalence remains around 450 to 500 cases per 1000, which is typical of a high transmission setting. Furthermore, Approach A shows the most reductions in prevalence and a shift in the peak, followed by Approach B then Approach C which suggests no delay in the peak in malaria prevalence as ITN efficacy increases. Additionally, transmission occurs for a shorter period in Approach A as a result of a short-lived peak in malaria prevalence and cases dropping below 50 cases per 1000, which limits the reservoir of infections available for transmission to mosquitoes.

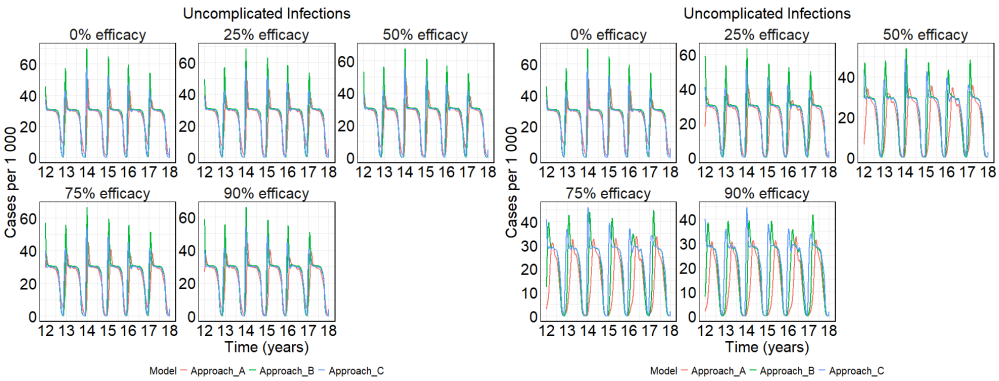

(a) Uncomplicated cases under routine IRS. (b) Uncomplicated cases under ITN.

Fig. 4: Projected malaria cases per 1000 experiencing uncomplicated symptoms, during a period of 6 years using different weather modelling approaches in a population with vector control intervention.

Figure 4a shows that all three modelling approaches project that uncomplicated malaria infections range between 0 and 60 cases per 1000 through the year. Despite this, the timing of the peak in cases varies across modelling approaches, with Approach C predicting an earlier peak, followed by Approach B then Approach A. In addition, the peak projected by Approach A is lower than that of Approach C and Approach B that predicts the highest peak in cases, which complements the higher incidence projected. In spite of this, increasing IRS efficacy does not substantially reduce the occurrence of uncomplicated cases. Improving ITN efficacy also helps to prevent infection and reduces the occurrence of cases experiencing uncomplicated

medRxiv preprint doi: https://doi.org/10.1101/2024.07.19.24310710; this version posted July 19, 2024. The copyright holder for this preprint (which was not certified by peer review) is the author/funder, who has granted medRxiv a license to display the preprint in perpetuity. It is made available under a CC-BY 4.0 International license .

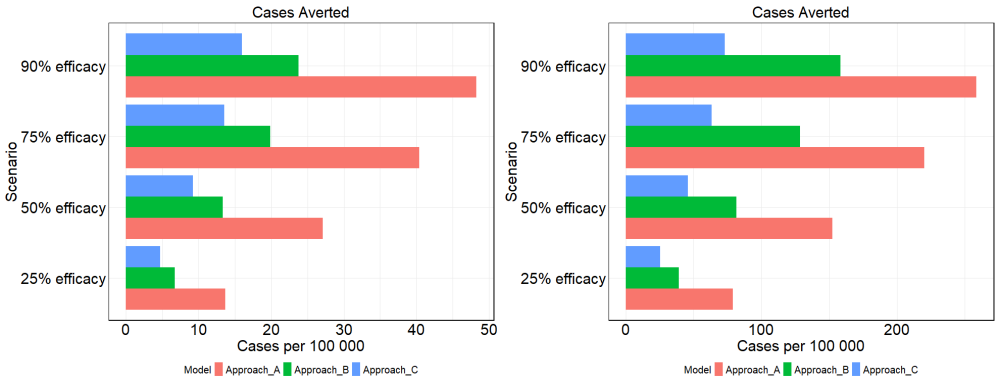

(a) Cases averted through routine IRS. (b) Cases averted through ITN distribution.

Fig. 5: Projected cases averted (per 100 000) as a result of vector control intervention.

malaria symptoms that require treatment. Figure 4b illustrates that uncomplicated infections peak between 30 and 60 cases per 1000 and a delay in the timing of the peak in cases as ITN efficacy increases. Additionally, Approach A projects the lowest peaks with cases ranging around 30 to 40 cases per 1000, whereas Approach B projects higher cases than Approach C at ITN efficacy lower than 75 % despite comparable peaks projected at higher efficacy. Approach C projects an earlier peak in infections, followed by Approach B then Approach A which also shows substantial reduction in the length of the transmission season with increasing ITN efficacy. Although there is variation in the predicted peaks at low efficacy when Approach B and Approach C are adopted, Approach A shows the little to no variation in the size of the peaks predicted at all ITN efficacy levels. Nonetheless, increasing ITN efficacy reduces around 10 cases per 1000 in uncomplicated cases across all modelling approaches.

Figure 5a shows that more cases are averted when Approach A is used, followed by Approach B then Approach C. In addition, the projected number of cases averted increase with increasing efficacy for each modelling approach and the gap in cases averted between modelling approaches is expanded with increased IRS efficacy. The least number of cases (less than 5 cases per 100 000) are averted when Approach C is used at 25 % IRS efficacy, whereas the most number of cases (about 50 cases per 100 000) are averted when Approach A is adopted at 90 % IRS efficacy. Approach B moderately projects the number of cases averted, with the smallest gap (of less than 5 cases per 100 000) in cases averted between approaches occurs between Approach B and Approach C at 25 % IRS efficacy and the largest gap (of about 30 cases per 100 000) occurs between Approach A and Approach C 90 % IRS efficacy followed by the gap of about 25 cases per 100 000 between Approach A and Approach B. In addition, Figure 5b shows that more cases are averted when Approach A is adopted, followed by Approach B then Approach C. Furthermore, the projected number of cases averted increase with increasing efficacy for each modelling approach and the gap in cases averted between modelling approaches is expanded with increased ITN

medRxiv preprint doi: https://doi.org/10.1101/2024.07.19.24310710; this version posted July 19, 2024. The copyright holder for this preprint (which was not certified by peer review) is the author/funder, who has granted medRxiv a license to display the preprint in perpetuity. It is made available under a CC-BY 4.0 International license .

efficacy. The least number of cases (less than 50 cases per 100 000) are averted when Approach C is used at 25 % ITN efficacy, whereas the most number of cases (more than 250 cases per 100 000) are averted when Approach A is adopted at 90 % ITN efficacy. Approach B moderately projects the number of cases averted, with the smallest difference in cases averted between approaches occurs between Approach B and Approach C at 25 % ITN efficacy and the largest difference of about 200 cases per 100 000 occurs between Approach A and Approach C 90 % ITN efficacy followed by a difference of about 75 cases per 100 000 between Approach A and Approach B.

Discussion

All three approaches provide robust projections of malaria prevalence, consistent with findings from Lou and Zhao [22], who used Approach A to demonstrate the potential for disease control or elimination with increased personal protection through vector control. Our simulation results indicate that Approach A offers a conservative view of malaria transmission, projecting the lowest peaks compared to other approaches. This is particularly relevant when assessing vector control interventions, as Approach A shows significant reductions in prevalence, incidence, and uncomplicated infections with improved vector control efficacy. Approach A offers a simplified view of malaria transmission by focusing on temperature-related mosquito mortality and biting rates, without considering all aquatic stages, which makes it effective for evaluating the impact of vector control intervention. In contrast, Approach B, which investigates how temperature regulates mosquito development and survival, projects higher peaks in malaria incidence. This approach offers a detailed and reliable description of mosquito population dynamics by accounting for temperature dependence at all developmental stages, resulting in accurate predictions of mosquito availability for transmission, the start of the transmission season, and the duration of the transmission period. Abiodun et al. [11], adopted this approach to explore mosquito population dynamics, including resting, mating, and host-seeking behavior, without focusing on malaria transmission but investigating aquatic mosquito development and survival without considering environmental effects. Approach C, adopted by Abiodun et al. [2], accounts for the rainfall dependence of mosquito egg environmental capacity, regulating the aquatic mosquito population and the temperature dependence of parasite development. However, it neglects the development of mosquitoes during the aquatic stages, affecting the number of mosquitoes available for transmission. This approach leads to ineffective vector control interventions, as demonstrated in our study where Approach C showed no advantages over Approaches A and B. While Approach A provides a simplified model by focusing only on temperature-regulated mosquito mortality and biting rates, critical factors in mosquito development and behavior may be overlooked, potentially limiting the accuracy of predictions. In contrast, the higher peaks in malaria incidence projected Approach B, could lead to an overestimation of the burden of malaria under certain conditions, which may affect the perceived urgency and allocation of resources for control intervention. Furthermore, omission of temperature dependence in mosquito development during the aquatic stages in Approach C can lead to an

medRxiv preprint doi: https://doi.org/10.1101/2024.07.19.24310710; this version posted July 19, 2024. The copyright holder for this preprint (which was not certified by peer review) is the author/funder, who has granted medRxiv a license to display the preprint in perpetuity. It is made available under a CC-BY 4.0 International license .

inaccurate representation of mosquito availability for transmission. This simplification might underestimate the actual mosquito population dynamics, impacting the effectiveness of modelled interventions. More detailed approaches, such as Approach B, while providing thorough insights, are resource-intensive and complex and this complexity can make these models less accessible for routine use by public health practitioners in resource-limited settings. Our study primarily explores vector control interventions and suggests future research into additional malaria control measures such as drug treatments, larviciding, vaccines, and community-based interventions, which play crucial roles in comprehensive malaria control strategies.

Conclusions

This comprehensive analysis enhances our understanding of how temperature and rainfall influence various factors in malaria transmission dynamics. Although these modeling approaches were developed for different aspects of malaria transmission, their robust projections of malaria prevalence demonstrate their ability to accurately represent transmission dynamics under different intervention scenarios and weather conditions. Detailed integration of temperature-dependent mosquito dynamics across all developmental stages accurately identifies peak transmission periods and informs the duration of transmission seasons. These insights are crucial for evidence-based strategies, guiding targeted allocation of insecticide spraying and bed net distribution during peak mosquito activity to maximize efficacy in both high and low transmission settings. Additionally, they support timely distribution of antimalarial drugs to prevent and manage infections effectively during periods of heightened transmission risk. In contrast, a simplified yet effective approach to malaria transmission dynamics assesses the impact of vector control interventions that target mosquitoes affected by temperature changes. In high transmission settings, interventions enhancing mosquito mortality or reducing biting rates during peak seasons can significantly reduce malaria incidence. However, simplistic models may overlook complexities in mosquito biology and ecology, potentially limiting accuracy across diverse settings. Moreover, emphasizing the dependence of mosquito egg environmental capacity on rainfall provides insights into ecological factors influencing mosquito populations. This highlights the importance of environmental management and targeted vector control strategies tailored to local rainfall patterns and mosquito breeding habitats. Nevertheless, models that omit mosquito development during aquatic stages may compromise accuracy in predicting mosquito populations and transmission potential.

Declarations

Funding

This work was supported, in whole or in part, by the Bill & Melinda Gates Foundation [**INV047-048**]. Under the grant conditions of the Foundation, a Creative Commons Attribution 4.0 Generic License has already been assigned to the Author Accepted Manuscript version that might arise from this submission.

medRxiv preprint doi: https://doi.org/10.1101/2024.07.19.24310710; this version posted July 19, 2024. The copyright holder for this preprint (which was not certified by peer review) is the author/funder, who has granted medRxiv a license to display the preprint in perpetuity. It is made available under a CC-BY 4.0 International license .

Competing interests

The authors declare that they have no competing interests.

Ethics approval

The research protocol for this study was reviewed and approved by the University of Cape Town's Faculty of Health Sciences Human Research Ethics Committee (UCT HREC) [**058/2024**] and the Limpopo Provincial Department of Health [**LP_2024-05-026**].

Data availability

The temperature and rainfall datasets used in the current study are publicly available in the World Bank, Climate Change Knowledge Portal repository. https://climateknowledgeportal.worldbank.org

Code availability

The code developed to generate simulation results for the model is publicly available at the Malaria Weather Models Github repository. https://github.com/maditogladstone/malariaweathermodels.git

Acknowledgements

Bill and Melinda Gates Foundation (BMGF), Malaria Modelling and Analytics, Leaders in Africa (MMALA) programme, Limpopo Malaria Control Programme, and Clinton Health Access Initiative (CHAI) South Africa, SADC Elimination 8 (E8) Initiative Technical Working Group (TWG)

medRxiv preprint doi: https://doi.org/10.1101/2024.07.19.24310710; this version posted July 19, 2024. The copyright holder for this preprint (which was not certified by peer review) is the author/funder, who has granted medRxiv a license to display the preprint in perpetuity. It is made available under a CC-BY 4.0 International license .

References

[1] Traoré, B., Sangaré, B., Traoré, S.: A mathematical model of malaria transmission with structured vector population and seasonality. J. Appl. Math. **2017**, 1–15 (2017)

[2] Abiodun, G.J., Njabo, K.Y., Witbooi, P.J., Adeola, A.M., Fuller, T.L., Okosun, K.O., Makinde, O.S., Botai, J.O.: Exploring the influence of daily climate variables on malaria transmission and abundance of anopheles arabiensis over nkomazi local municipality, mpumalanga province, south africa. J. Environ. Public Health **2018**, 3143950 (2018)

[3] Griffin, J.T., Bhatt, S., Sinka, M.E., Gething, P.W., Lynch, M., Patouillard, E., Shutes, E., Newman, R.D., Alonso, P., Cibulskis, R.E., Ghani, A.C.: Potential for reduction of burden and local elimination of malaria by reducing plasmodium falciparum malaria transmission: a mathematical modelling study. Lancet Infect. Dis. **16**(4), 465–472 (2016)

[4] Eikenberry, S.E., Gumel, A.B.: Mathematical modeling of climate change and malaria transmission dynamics: a historical review. J. Math. Biol. **77**(4), 857–933 (2018)

[5] Abiodun, G.J., Adebiyi, B.O., Abiodun, R.O., Oladimeji, O., Oladimeji, K.E., Adeola, A.M., Makinde, O.S., Okosun, K.O., Djidjou-Demasse, R., Semegni, Y.J., Njabo, K.Y., Witbooi, P.J., Aceves, A.: Investigating the resurgence of malaria prevalence in south africa between 2015 and 2018: A scoping review. Open Public Health J. **13**(1), 119–125 (2020)

[6] Okuneye, K., Eikenberry, S.E., Gumel, A.B.: Weather-driven malaria transmission model with gonotrophic and sporogonic cycles. J. Biol. Dyn. **13**(sup1), 288–324 (2019)

[7] GMP: Malaria surveillance, monitoring & evaluation: a reference manual. World Health Organization. Accessed: 2024-6-19 (2018)

[8] Msugupakulya, B.J., Urio, N.H., Jumanne, M., Ngowo, H.S., Selvaraj, P., Okumu, F.O., Wilson, A.L.: Changes in contributions of different anopheles vector species to malaria transmission in east and southern africa from 2000 to 2022. Parasit. Vectors **16**(1), 408 (2023)

[9] Munhenga, G., Oliver, S.V., Lobb, L.N., Mazarire, T.T., Sekgele, W., Mashatola, T., Mabaso, N., Dlamini, D.M., Zulu, M., Moletsane, F., Letinić, B.D., Zawada, J., Burke, A., Matamba, A., Brooke, B.D.: Malaria risk and receptivity: Continuing development of insecticide resistance in the major malaria vector anopheles arabiensis in northern KwaZulu-Natal, south africa. S. Afr. J. Sci. **118**(3/4) (2022)

medRxiv preprint doi: https://doi.org/10.1101/2024.07.19.24310710; this version posted July 19, 2024. The copyright holder for this preprint (which was not certified by peer review) is the author/funder, who has granted medRxiv a license to display the preprint in perpetuity. It is made available under a CC-BY 4.0 International license .

[10] Maharaj, R., Morris, N., Seocharan, I., Kruger, P., Moonasar, D., Mabuza, A., Raswiswi, E., Raman, J.: The feasibility of malaria elimination in south africa. Malar. J. **11**(1), 423 (2012)

[11] Abiodun, G.J., Maharaj, R., Witbooi, P., Okosun, K.O.: Modelling the influence of temperature and rainfall on the population dynamics of anopheles arabiensis. Malar. J. **15**(1) (2016)

[12] Tian, H.: Modeling malaria elimination with changing landscapes, climate, and potentially invasive vectors. Proc. Natl. Acad. Sci. U. S. A. **120**(11), 2301653120 (2023)

[13] Sithole, T.P.: Climate Change and Variability Effects on Malaria Prevalence in the Limpopo Province, South Africa (2015)

[14] Agyekum, T.P., Botwe, P.K., Arko-Mensah, J., Issah, I., Acquah, A.A., Hogarh, J.N., Dwomoh, D., Robins, T.G., Fobil, J.N.: A systematic review of the effects of temperature on anopheles mosquito development and survival: Implications for malaria control in a future warmer climate. Int. J. Environ. Res. Public Health **18**(14), 7255 (2021)

[15] Braack, L., Bornman, R., Kruger, T., Dahan-Moss, Y., Gilbert, A., Kaiser, M., Oliver, S.V., Cornel, A.J., Lee, Y., Norris, D.E., Coetzee, M., Brooke, B., Jager, C.d.: Malaria vectors and vector surveillance in limpopo province (south africa): 1927 to 2018. Int. J. Environ. Res. Public Health **17**(11), 4125 (2020)

[16] Landman, W.A., Sweijd, N., Masedi, N., Minakawa, N.: The development and prudent application of climate-based forecasts of seasonal malaria in the limpopo province in south africa. Environ. Dev. **35**(100522), 100522 (2020)

[17] Behera, S.K., Morioka, Y., Ikeda, T., Doi, T., Ratnam, J.V., Nonaka, M., Tsuzuki, A., Imai, C., Kim, Y., Hashizume, M., Iwami, S., Kruger, P., Maharaj, R., Sweijd, N., Minakawa, N.: Malaria incidences in south africa linked to a climate mode in southwestern indian ocean. Environ. Dev. **27**, 47–57 (2018)

[18] Silal, S.P., Barnes, K.I., Kok, G., Mabuza, A., Little, F.: Exploring the seasonality of reported treated malaria cases in mpumalanga, south africa. PLoS One **8**(10), 76640 (2013)

[19] Baeza, A., Bouma, M.J., Dhiman, R., Pascual, M.: Malaria control under unstable dynamics: reactive vs. climate-based strategies. Acta Trop. **129**, 42–51 (2014)

[20] Bai, L., Morton, L.C., Liu, Q.: Climate change and mosquito-borne diseases in china: a review. Global. Health **9**(1), 10 (2013)

[21] Ngarakana-Gwasira, E.T., Bhunu, C.P., Masocha, M., Mashonjowa, E.: Assessing the role of climate change in malaria transmission in africa. Malar. Res. Treat.

medRxiv preprint doi: https://doi.org/10.1101/2024.07.19.24310710; this version posted July 19, 2024. The copyright holder for this preprint (which was not certified by peer review) is the author/funder, who has granted medRxiv a license to display the preprint in perpetuity. It is made available under a CC-BY 4.0 International license .

2016, 7104291 (2016)

[22] Lou, Y., Zhao, X.-Q.: A climate-based malaria transmission model with structured vector population. SIAM J. Appl. Math. **70**(6), 2023–2044 (2010)

[23] Okuneye, K., Gumel, A.B.: Analysis of a temperature- and rainfall-dependent model for malaria transmission dynamics. Math. Biosci. **287**, 72–92 (2017)

[24] Griffin, J.T., Hollingsworth, T.D., Okell, L.C., Churcher, T.S., White, M., Hinsley, W., Bousema, T., Drakeley, C.J., Ferguson, N.M., Basáñez, M.-G., Ghani, A.C.: Reducing plasmodium falciparum malaria transmission in africa: a model-based evaluation of intervention strategies. PLoS Med. **7**(8), 1000324 (2010)

[25] Moukam Kakmeni, F.M., Guimapi, R.Y.A., Ndjomatchoua, F.T., Pedro, S.A., Mutunga, J., Tonnang, H.E.Z.: Spatial panorama of malaria prevalence in africa under climate change and interventions scenarios. Int. J. Health Geogr. **17**(1) (2018)

[26] Ozodiegwu, I.D., Ambrose, M., Galatas, B., Runge, M., Nandi, A., Okuneye, K., Dhanoa, N.P., Maikore, I., Uhomoibhi, P., Bever, C., Noor, A., Gerardin, J.: Application of mathematical modelling to inform national malaria intervention planning in nigeria. Malar. J. **22**(1), 137 (2023)

[27] Agusto, F.B., Gumel, A.B., Parham, P.E.: Qualitative assessment of the role of temperature variations on malaria transmission dynamics. J. Biol. Syst. **23**(04), 1550030 (2015)

[28] Beloconi, A., Nyawanda, B.O., Bigogo, G., Khagayi, S., Obor, D., Danquah, I., Kariuki, S., Munga, S., Vounatsou, P.: Malaria, climate variability, and interventions: modelling transmission dynamics. Sci. Rep. **13**(1), 7367 (2023)

[29] Awine, T., Silal, S.P.: Accounting for regional transmission variability and the impact of malaria control interventions in ghana: a population level mathematical modelling approach. Malar. J. **19**(1), 423 (2020)

[30] Selvaraj, P., Wenger, E.A., Gerardin, J.: Seasonality and heterogeneity of malaria transmission determine success of interventions in high-endemic settings: a modeling study. BMC Infect. Dis. **18**(1), 413 (2018)

[31] Sherrard-Smith, E., Ngufor, C., Sanou, A., Guelbeogo, M.W., N'Guessan, R., Elobolobo, E., Saute, F., Varela, K., Chaccour, C.J., Zulliger, R., Wagman, J., Robertson, M.L., Rowland, M., Donnelly, M.J., Gonahasa, S., Staedke, S.G., Kolaczinski, J., Churcher, T.S.: Inferring the epidemiological benefit of indoor vector control interventions against malaria from mosquito data. Nat. Commun. **13**(1), 3862 (2022)

[32] Larsen, D.A., Martin, A., Pollard, D., Nielsen, C.F., Hamainza, B., Burns, M.,

medRxiv preprint doi: https://doi.org/10.1101/2024.07.19.24310710; this version posted July 19, 2024. The copyright holder for this preprint (which was not certified by peer review) is the author/funder, who has granted medRxiv a license to display the preprint in perpetuity. It is made available under a CC-BY 4.0 International license .

Stevenson, J., Winters, A.: Leveraging risk maps of malaria vector abundance to guide control efforts reduces malaria incidence in eastern province, zambia. Sci. Rep. **10**(1), 10307 (2020)

[33] Korsah, M.A., Johnston, S.T., Tiedje, K.E., Day, K.P., Flegg, J.A., Walker, C.R.: Mathematical assessment of the role of intervention programs for malaria control. Bull. Math. Biol. **86**(8), 91 (2024)

[34] Abiodun, G.J., Witbooi, P.: Modelling the impact of climatic variables on malaria transmission. Hacet. J. Math. Stat. **4**(46) (2017)