Quantifying brain health in acute ischemic stroke through effective reserve

Markus D. Schirmer,[a*] Kenda Alhadid,[a] Robert W. Regenhardt,[a] Natalia S. Rost[a]

[a]Department of Neurology, Massachusetts General Hospital, Harvard Medical School, Boston, MA, USA.

Abstract

Objective: To evaluate brain health through the use of expanded structural measures of reserve, that incorporate pre-existing pathology and cerebrovascular disease burden.

Background: Outcome modeling at the time of stroke is a key challenge in patient care. The related concepts of brain health and reserve may help to understand the observed differences in patient outcomes. Effective reserve (eR) quantifies the brain's capacity to compensate for negative effects, while accounting for pre-existing disease burden. Here, we extend the concept of eR by including measures of white matter hyperintensity (WMH) burden and compare the utility of brain volume and brain parenchymal fraction (BPF) to enhance its modeling capabilities.

Design/Methods: Acute ischemic stroke patients from a single center between 2003-2011 with available neuroimaging data were included in this study. Modified Rankin Score (mRS) at 90 days post admission was used to assess functional outcome. Neuroimaging data were analyzed using dedicated deep-learning enabled pipelines to extract measures of WMH, brain, and intracranial volumes (ICV). BPF is given as the ratio of brain volume to ICV. eR is defined as a latent variable using structural equation modeling that includes age, WMH volume, and either BPF or brain volume. Models were compared using Bayes Information Criterion (BIC).

Results: 476 patients were eligible for inclusion: median age 65.8 (interquartile range: 55.3-76.3) years, 65.3% male. There was an inverse association between eR and mRS in both brain volume and BPF models (path coefficients: -0.75 and -0.55, respectively; $p<0.001$). The model utilizing brain volume (BIC=4429.6) outperformed the model using BPF (BIC=4802.2).

Conclusions: In this work, we significantly extended the concept of eR and advanced its translational potential. The demonstrated association of higher eR and better post-stroke outcome signifies its potential as a descriptor of brain health, and a protective measure against acute ischemic injury.

Keywords: brain health, effective reserve, brain reserve, stroke, outcome

Introduction

Stroke is a leading contributor to disease burden and long-term disability worldwide.[1,2] With aging populations and the increased incidence of stroke in younger patients, the risk of stroke and related vascular dementia is increasing, and it is imperative to prevent related long-term disability from cerebrovascular disease (CVD) and associated neuropathology.[3–7] Comprehensive, individualized outcome prediction at the time of injury and a broad understanding of the disease processes involved may lead to effective prevention strategies for adverse cognitive and functional outcomes, thereby enriching patients' quality of life and reducing the economic burden on society.[8] However, mechanisms of post-stroke recovery are complex, and the efficacy of existing conventional outcome prediction models is limited.[9,10]

Understanding patient-specific differences in terms of functional outcome and cognitive decline after pathological changes is an area of active research in the medical sciences. With brain health becoming a prioritized and significant action goal across the globe, related concepts of structural and functional reserve are widely utilized to understand differences in neurological outcomes in otherwise similar patients.[11–14] In essence, reserve is the brain's ability to compensate for negative effects.[15] While the concept is established in fields such as neurodegeneration, its adaptation to stroke populations is relatively new, where studies commonly focus on cognitive reserve.[16–19] However, the brain's structural reserve has the potential to be a key biomarker, considering the structural lesional injury incurred after a vascular event.

Brain reserve quantifies the brain's capacity to compensate for negative effects without accounting for pre-existing pathology, such as brain atrophy or white matter hyperintensity (WMH) burden, which may compromise the brain's efficacy. In an initial study,[20] we expanded the idea of brain reserve in stroke populations by defining a latent variable "effective reserve" (eR), which models the reserve of the brain after negative effects, e.g., CVD, have been considered. As such, eR presents a measure that aims to describe the brain's remaining capabilities to counteract the negative, pathological effects of an acute stroke event. However, clinical challenges exist when examining biological aspects of reserve and quantifying existing neuropathology to improve stroke prognostication, such as clinical time constraints at the time of stroke, which result in low resolution clinical neuroimaging, and high heterogeneity in physiological presentations.

Recently, we developed a fully automated approach for quantifying WMH burden in low-resolution acute neuroimaging data,[21] which enables the quantification of this important biomarker at the bedside. Furthermore, brain volume at the time of admission has been demonstrated to be an important factor for determining functional and patient reported stroke outcome,[22–24] which outperforms estimates of brain atrophy as an independent factor in outcome models.[25]

In this work, we sought to expand on our initial model of brain reserve, which relied on measures of intracranial volume and systolic blood pressure at the time of admission to characterize the maximum reserve of a patient and the acute vascular burden at time of stroke. By using more relevant measures of quantifying long-term disease burden, specifically, using brain volume instead of intracranial volume and WMH volume instead of systolic blood pressure, we aimed to demonstrate that the protective mechanism of effective reserve is significantly larger than the negative effect of the stroke lesion volume. Importantly, these measures of eR can be easily obtained from standard-of-care neuroimaging in acute clinical stroke presentations, creating an accessible prognostication tool that can be widely implemented at any stroke center.

Materials and Methods

Standard protocol approvals, registration, and patient consent

The use of human patients in this study was approved by the local Institutional Review Board and informed written consent was obtained according to the Declaration of Helsinki from all participating patients or their surrogates at time of enrollment.

Study design, setting, and patient population

Patients over 18 years of age presenting to the emergency department at a single center between 2003 and 2011 with signs and symptoms of acute ischemic stroke (AIS) were eligible for enrollment. In this analysis, we included subjects with (a) acute cerebral infarct lesions confirmed by diffusion weighted imaging (DWI) scans obtained within 48 hours of symptom onset and (b) T2 fluid-attenuated inversion recovery (T2-FLAIR) sequences available for volumetric analyses. All clinical variables including demographics and medical history were obtained on admission. Patients and/or their caregivers were interviewed in person or by telephone at 3 months after the acute clinical stroke presentation to assess functional outcome as determined by the mRS score. If the patient could not be contacted, an mRS score was determined from review of clinical evaluations.

Neuroimaging data

Each patient's MRI data included DWI (single-shot echo-planar imaging; one to five B0 volumes, 6 to 30 diffusion directions with b=1000 s/mm2, 1-3 averaged volumes) and T2 FLAIR imaging (TR 5000ms, minimum TE of 62 to 116ms, TI 2200ms, FOV 220-240mm), as part of the standard AIS protocol. DWI datasets were assessed and corrected for motion and eddy current distortions.[26] Acute infarct volume was manually assessed on DWI (DWIv). Automated estimates of WMH,[21] as well as intracranial and brain volume, defined as combined white and gray matter volume,[25] were determined using deep learning enabled, dedicated image analysis pipelines, specifically developed for the analysis of acute stroke imaging data.

Statistical analysis and model description

Prior to analysis, each automatically segmented mask underwent manual quality control by visual inspection. For each patient, WMH, brain, and intracranial volume was determined by multiplying the number of voxels within the mask by the corresponding voxel size. BPF was subsequently calculated as the ratio of brain volume to intracranial volume. WMH and lesion load were defined as the ratio of WMH and lesion volume to brain volume, respectively. BPF, WMH load, and lesion load were logit-transformed prior to model fit. Brain volume was used in units of dm^3 and age in units of decades due to statistical considerations.

Effective reserve (eR) was modeled using latent variable analyses. We assume a direct (positive) association between brain volume or BPF and eR, based on our prior findings.[23,25] Additionally, age is believed to hinder the brain's capacity to withstand insults.[27] WMH load reflects a measure of chronic cerebrovascular disease burden. The model is subsequently given by

$$eR \sim Age + WMH\ load + Brain\ volume/BPF.$$

Moreover, we include the established link between stroke lesion load and outcome. Model parameters were estimated using the R package LAVAAN[28] without priors, using a maximum likelihood estimator with robust errors. Model comparison was conducted using the Bayes Information Criterion (BIC). All statistical analyses were conducted using the computing environment R.[29] Significance was set at $p<0.05$.

Data availability statement

The authors agree to make the data, methods used in the analysis, and materials used to conduct the research available to any researcher for the express purpose of reproducing the results and with the explicit permission for data sharing by the local institutional review board.

Results

Table 1 summarizes the study cohort characteristics. In this study, the median age was 65.8 years (interquartile range: 55.3-76.3), 65.3% were male, and 69.7% had a prior diagnosis of hypertension.

Table 1. Characteristics of the cohort utilized in this study. (IQR: interquartile range; HTN: hypertensive; DM2: Diabetes Mellitus Type 2; BPF: brain parenchymal fraction)

n	476
mRS (median [IQR])	1 [0, 2]
Age (years; median [IQR])	65.8 [55.3, 76.3]
HTN (%)	332 (69.7)
DM2 (%)	96 (20.2)
Non-Smoker (%)	286 (60.1)
Sex (male; %)	311 (65.3)
Lesion load (%; median [IQR])	0.17 [0.04, 0.99]
BPF (%; median [IQR])	80.56 [77.3, 82.9]
Brain volume (cc; median [IQR])	1306.92 [1190.9, 1413.9]
WMH load (%; median [IQR])	0.5 [0.2, 1.4]

Both structural equation models, including their path coefficients, are shown in Figure 1. Model parameters of the brain volume model (Figure 1A) suggest that age and WMH load negatively affect eR (path coefficients -0.8 and -0.5, respectively; $p<0.001$), whereas higher brain volume leads to an increase in effective reserve (path coefficient 0.1; $p<0.001$). The BPF model (Figure 1B), shows the same trends, with age and WMH load reducing eR (path coefficients -1.09 and 0.68, respectively; $p<0.001$), and higher BPF, i.e., less brain atrophy, leading to a higher effective reserve.

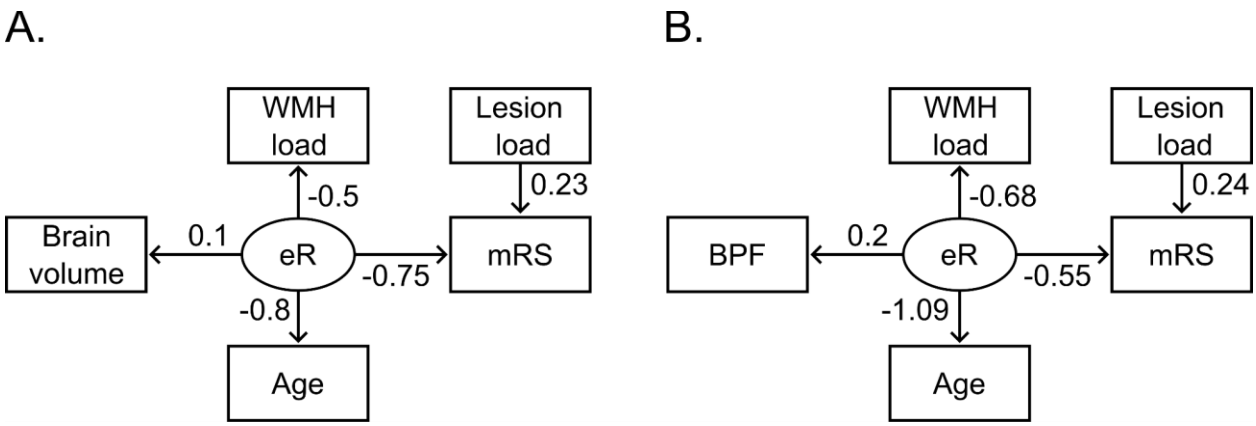

Figure 1. Structural equation models with estimated associations using path analysis. All path coefficients had a p-value of $p<0.001$. A. Brain volume model (BIC=4429.6). B. BPF model (BIC=4802.2).

In both models, higher effective reserve was associated with lower mRS scores, i.e., better measured functional patient outcomes (path coefficients -0.75 and -0.55 for the brain volume and BPF model, respectively; $p<0.001$), in contrast to increased lesion load, which led to higher mRS scores.

Model comparison using BIC, resulted in $\Delta BIC = -372.7$ (brain volume model BIC=4429.6; BPF model BIC=4802.2) providing strong evidence that the brain volume model outperforms the BPF model.

Discussion

Structural and functional reserves have been proposed as concepts that aim to quantify the brain's capacity to withstand insults. Effective reserve, an extension of structural reserve, further incorporates measures of underlying disease burden that are thought to reduce the amount of reserve that can effectively be utilized. As such, eR is closely related to the concept of brain health. In this study, we further extended this approach, by utilizing clinical and neuroimaging measures that are known to affect brain health, to create an outcome model linking this latent factor to observed clinical patient outcomes, measured by the mRS score. In this work, we demonstrated that eR is an important biomarker of patient outcome that can readily be assessed at the time of acute stroke clinical presentation.

Through the application of deep-learning enabled neuroimage analysis pipelines dedicated for clinical stroke imaging data,[21,23,25] we quantified each patients' brain, WMH, and intracranial volumes from clinically available MR imaging data. In the effective reserve models, both brain volume and BPF were associated with mRS, where higher effective reserve led to lower mRS scores, i.e., better outcomes. Comparing the utility of using brain volume and BPF, as a surrogate measure of brain atrophy, we further demonstrated that the using brain volume substantially outperforms the BPF in our latent variable models ($|\Delta BIC| = 372.7>10$).[30] This is in line with recent literature, where brain volume outperforms the use of BPF as a surrogate measure of brain atrophy in multivariable linear regression models assessing favorable ($mRS \leq 2$) functional outcomes in stroke patients.[25]

We note that the path coefficients between eR and mRS are 3.3 and 2.3 times higher in amplitude, but opposite in direction, compared to the effect of lesion load in the brain volume and BPF model,

respectively. The estimated ratios are significantly higher than in our prior study (1.4), in which we utilized intracranial volume and systolic blood pressure instead of brain volume/BPF and WMH volume, respectively.[20] This underlines the significant protective mechanism that eR represents in accounting for existing disease burden and highlights its importance for stroke outcome prognostication.

There are some limitations to the current study design. In this work, we utilized mRS to quantify post-stroke outcome, one of the most commonly used measures in the literature.[31] The mRS is known to be biased to overly represent motor function and does not fully represent the added information based on cognitive and/or patient centric outcome measures, however it persists as the standard outcome measure after stroke, supporting the generalizability and translation potential of our results. Additionally, information on stroke treatment details for this patient population was not available. Future large-scale studies in which other measures of outcomes and treatment information are recorded are subsequently needed to fully investigate the potential of eR as a general marker of brain health affected by acute injury.

Strengths of our study include the use of a large hospital-based cohort with routinely-acquired clinical neuroimaging data. This supports the immediate translation potential of the results. By utilizing clinical neuroimaging analysis pipelines, we were able to create a quantitative marker of brain health and assess its associations with post-stroke outcomes at the time of admission to the hospital.

In this work, we have significantly extended the concept of effective reserve. We have shown that measures of brain volume, i.e., the total amount of brain matter, is a better factor in modeling stroke outcome and surrogate measures of brain health. Importantly, the association of higher effective reserve and better post-stroke functional outcome shows the immense potential of eR to be used as a quantitative and easily extractable structural measure of brain health, and an indicator of the brain's protective mechanisms against acute ischemic injury.

Funding

Research reported in this publication was supported by the National Institute of Aging of the National Institutes of Health under award number R21AG083559. NSR is supported by NINDS U19NS115388. RWR serves on a DSMB for a trial sponsored by Rapid Medical, serves as site PI for studies sponsored by Microvention and Penumbra, and receives research grant support from National Institutes of Health (NINDS R25NS065743), Society of Vascular and Interventional Neurology, and Heitman Stroke Foundation. MDS is supported by the Heinz Family Foundation, Heitman Stroke Foundation, and NIA R21AG083559.

References

1. Kyu HH, Abate D, Abate KH, et al. Global, regional, and national disability-adjusted life-years (DALYs) for 359 diseases and injuries and healthy life expectancy (HALE) for 195 countries and territories, 1990–2017: a systematic analysis for the Global Burden of Disease Study 2017. The Lancet. Elsevier; 2018;392:1859–1922.
2. Benjamin EJ, Muntner P, Alonso A, et al. Heart disease and stroke statistics—2019 update: a report from the American Heart Association. Circulation. Am Heart Assoc; 2019;139:e56–e528.
3. Rist PM, Chalmers J, Arima H, et al. Baseline cognitive function, recurrent stroke, and risk of dementia in patients with stroke. Stroke. Am Heart Assoc; 2013;44:1790–1795.
4. Douiri A, Rudd AG, Wolfe CD. Prevalence of poststroke cognitive impairment: South London

stroke register 1995–2010. Stroke. Am Heart Assoc; 2013;44:138–145.
5. Ihle-Hansen H, Thommessen B, Wyller TB, et al. Incidence and subtypes of MCI and dementia 1 year after first-ever stroke in patients without pre-existing cognitive impairment. Dement Geriatr Cogn Disord. Karger Publishers; 2011;32:401–407.
6. Jacquin A, Binquet C, Rouaud O, et al. Post-stroke cognitive impairment: high prevalence and determining factors in a cohort of mild stroke. J Alzheimers Dis. IOS Press; 2014;40:1029–1038.
7. Sachdev PS, Brodaty H, Valenzuela MJ, et al. Clinical determinants of dementia and mild cognitive impairment following ischaemic stroke: the Sydney Stroke Study. Dement Geriatr Cogn Disord. Karger Publishers; 2006;21:275–283.
8. World Health Organization. Neurological disorders: public health challenges. WHO; 2006.
9. Dhamoon MS, Moon YP, Paik MC, et al. Long-term functional recovery after first ischemic stroke: the Northern Manhattan Study. Stroke. Am Heart Assoc; 2009;40:2805–2811.
10. Brugnara G, Neuberger U, Mahmutoglu MA, et al. Multimodal predictive modeling of endovascular treatment outcome for acute ischemic stroke using machine-learning. Stroke. Am Heart Assoc; 2020;51:3541–3551.
11. Mortimer JA, Borenstein AR, Gosche KM, Snowdon DA. Very early detection of Alzheimer neuropathology and the role of brain reserve in modifying its clinical expression. J Geriatr Psychiatry Neurol. Sage Publications Sage CA: Thousand Oaks, CA; 2005;18:218–223.
12. Groot C, van Loenhoud AC, Barkhof F, et al. Differential effects of cognitive reserve and brain reserve on cognition in Alzheimer disease. Neurology. AAN Enterprises; 2018;90:e149–e156.
13. Brickman AM, Siedlecki KL, Muraskin J, et al. White matter hyperintensities and cognition: testing the reserve hypothesis. Neurobiol Aging. 2011;32:1588–1598.
14. Fotenos AF, Mintun MA, Snyder AZ, Morris JC, Buckner RL. Brain volume decline in aging: evidence for a relation between socioeconomic status, preclinical Alzheimer disease, and reserve. Arch Neurol. 2008;65:113–120.
15. Valenzuela MJ, Sachdev P. Brain reserve and dementia: a systematic review. Psychol Med. 2006;36:441–454.
16. Rosenich E, Hordacre B, Paquet C, Koblar SA, Hillier SL. Cognitive reserve as an emerging concept in stroke recovery. Neurorehabil Neural Repair. SAGE Publications Sage CA: Los Angeles, CA; 2020;34:187–199.
17. Gil-Pagés M, Sánchez-Carrión R, Tormos JM, Ensenat-Cantallops A, García-Molina A. A positive relationship between cognitive reserve and cognitive function after stroke: dynamic proxies correlate better than static proxies. J Int Neuropsychol Soc. Cambridge University Press; 2019;25:910–921.
18. Nunnari D, Bramanti P, Marino S. Cognitive reserve in stroke and traumatic brain injury patients. Neurol Sci. Springer; 2014;35:1513–1518.
19. Shin M, Sohn MK, Lee J, et al. Effect of cognitive reserve on risk of cognitive impairment and recovery after stroke: the KOSCO study. Stroke. Am Heart Assoc; 2020;51:99–107.
20. Schirmer MD, Etherton MR, Dalca AV, et al. Effective reserve: a latent variable to improve outcome prediction in stroke. J Stroke Cerebrovasc Dis. 2019;28:63–69.
21. Schirmer MD, Dalca AV, Sridharan R, et al. White matter hyperintensity quantification in large-scale clinical acute ischemic stroke cohorts–The MRI-GENIE study. NeuroImage Clin. Elsevier; 2019;23:101884.
22. Sagnier S, Catheline G, Dilharreguy B, et al. Admission Brain Cortical Volume. Stroke. American Heart Association; 2017;48:2113–2120.
23. Schirmer MD, Donahue KL, Nardin MJ, et al. Brain Volume: An Important Determinant of Functional Outcome After Acute Ischemic Stroke. Mayo Clin Proc. 2020;95:955–965.
24. Oliveira LC, Bonkhoff AK, Regenhardt RW, et al. Neuroimaging markers of patient-reported outcome measures in acute ischemic stroke. MedRxiv Prepr. Serv. Health Sci. 2023. p. 2023.12.27.23299829.
25. Alhadid K, Regenhardt RW, Rost NS, Schirmer MD. Brain volume is a better biomarker of

outcomes in ischemic stroke compared to brain atrophy. arXiv; 2024. p. 2403.12788.
26. Sorensen AG, Wu O, Copen WA, et al. Human Acute Cerebral Ischemia: Detection of Changes in Water Diffusion Anisotropy by Using MR Imaging. Radiology. Radiological Society of North America; 1999;212:785–792.
27. Nakayama H, Jørgensen HS, Raaschou HO, Olsen TS. The influence of age on stroke outcome. The Copenhagen Stroke Study. Stroke. Am Heart Assoc; 1994;25:808–813.
28. Rosseel Y. lavaan: An R package for structural equation modeling. J Stat Softw. 2012;48:1–36.
29. R Core Team. R: A language and environment for statistical computing. Vienna, Austria; 2024.
30. Raftery AE. Bayesian Model Selection in Social Research. Sociol Methodol. [American Sociological Association, Wiley, Sage Publications, Inc.]; 1995;25:111–163.
31. Quinn TJ, Dawson J, Walters MR, Lees KR. Functional outcome measures in contemporary stroke trials. Int J Stroke. 2009;4:200–205.