Title: Association of *MIOX* with Autosomal Dominant Polycystic Kidney Disease

Chandra Devi[1], Shivendra Singh[2], Bhagyalaxmi Mohapatra[3], Ashok Kumar[4], Sanjay Vikrant[5], Rana Gopal Singh[6], and Parimal Das[1],*

1 Centre for Genetic Disorders, Institute of Science, Banaras Hindu University, Varanasi, U.P., India-221005

2 Department of Nephrology, Institute of Medical Sciences, Banaras Hindu University, Varanasi, U.P., India-221005
3 Department of Zoology, Institute of Science, Banaras Hindu University, Varanasi, U.P., India-221005
4 Department of Pediatrics, Institute of Medical Sciences, Banaras Hindu University, Varanasi, U.P., India-221005
5 Department of Nephrology, AIIMS, Bilaspur, Himachal Pradesh, India-174001
6 Department of Medicine, Heritage Institute of Medical Science, Varanasi, U.P., India-221311

*Correspondence: parimal@bhu.ac.in

Abstract

Polycystic Kidney Disease (PKD), which affects 1 in 500 to 1000 people globally, is a monogenic, hereditary nephropathy marked by the gradual growth and expansion of many fluid-filled kidney cysts often resulting in end-stage renal disease. Even within the same family, ADPKD shows variation in phenotype, genotype, and disease severity. While *PKD1* and *PKD2* mutations account for the majority of ADPKD cases (75% and 15%, respectively), about 7% of cases are currently genetically unexplained. The ADPKD-associated genes *GANAB, DNAJB11,* and *ALG9* are also found in several genetically unresolved cases. Being a large gene constituted with 46 exons covering a 52 kb area and a 14 kb transcript and with six pseudogenes, *PKD1* poses a challenge for direct PCR and Sanger sequencing of all exons and exon-intron boundaries for mutation analysis. In order to find the disease-causing mutation(s) in a trio, whole exome sequencing (WES) was carried out. In the affected mother and daughter, no pathogenic variation(s) in the *PKD1, PKD2, DNAJB11, GANAB,* and *ALG9* candidate genes was observed. However, WES analysis identified a frameshift deletion [c.32del/p.Leu11ArgfsTer61] in *MIOX* as the most likely cause of the disease shared by both affected individuals. This has not previously been reported in ADPKD. Further, the differential gene expression profile analysis of the data of cysts from GEO database showed reduced expression of *MIOX* in cystic samples of ADPKD individuals as compared to minimal cystic tissues (MCT) and control tissue samples. Myo-Inositol Oxygenase, or MIOX, is an enzyme that specifically expresses in renal tubules and catalyses the initial step of the kidney-based myoinositol catabolism pathway. Both affected candidates also shared benign variants and other variations of uncertain significance which might

function as modifiers in the development of the disease. Further functional analysis of the variation(s) will clarify whether and how *MIOX* contributes to the development of the disease.

Keywords: Autosomal Dominant Polycystic Kidney Disease, MIOX, whole exome sequencing, trio study, PKD, differential gene expression

Introduction:

With 1 in 500-1000 worldwide prevalence, Autosomal Dominant Polycystic Kidney Disease (ADPKD) is a monogenic, inherited nephropathy characterized by progressive development and enlargement of numerous fluid-filled cysts in kidney often leading to End Stage Renal Disease (1,2). PKD exhibits heterogeneity in disease phenotype, genotype, and variability in disease severity, even within families (2,3). The major pathogenic variations occur in *PKD1* (~75%) and *PKD2* (~15% -18%) genes. However, in around 7% - 10% of cases, the genetic cause remains unresolved, and sporadic and mosaic ADPKD cases are also observed (4–6). The traditional clinical diagnosis of PKD relies on ultrasound examination to count the number of cysts in the kidneys, but this approach has limitations, particularly for individuals without a family history of the disease (7,8). Ultrasonography alone cannot identify at-risk patients or those with *de novo* disease until after the age of 40. While abdominal MRI can be utilized for the diagnosis of PKD, it is less accessible and more costly compared to ultrasound (8). Furthermore, an additional diagnostic hurdle is presented when patients exhibit visible cysts in the kidneys but fail to meet the clinical criteria for ADPKD diagnosis, and there is limited literature on a diagnostic approach in these patients (4).

PKD1 is a large gene that spans a 52kb region of genomic DNA and presents a challenge for direct PCR and Sanger sequencing for mutation analysis due to the presence of six pseudogenes (9). Adding to the genetic complexity of the disease, recent studies have identified *GANAB*, *DNAJB11*, *ALG9*, as minor/ associated genes (6,10). Whole exome sequencing (WES) has emerged as a quick and accurate diagnostic approach for genetic studies, particularly in cases where the genetic cause is unclear or hard to find (11,12). In this study, using WES of a trio, a frameshift-truncation deletion [c.32del/p.Leu11ArgfsTer61] in *MIOX* was found to be the most likely cause of the disease shared by both the affected mother and daughter, which has not been previously reported in ADPKD or other polycystic kidney diseases. No pathogenic variation(s)

was found in *PKD1, PKD2, DNAJB11, GANAB,* and *ALG9* candidate genes in affected mother and daughter. In addition, the differential gene expression analysis the cystic tissue samples (GEO dataset: GSE7869) revealed a remarkable reduction in *MIOX* gene expression. *MIOX* encodes Myo-Inositol Oxygenase, which expresses exclusively in renal tubules and catalyzes the first step of myoinositol catabolism pathway predominantly occurring in the kidney (13). While further functional evaluation is needed to elucidate the precise role of this variation in disease progression, the study highlights the potential of WES as a tool for PKD diagnosis and towards enhancing the scope for practicing personalized/precision medicine.

Material and Methods:

Sample collection and DNA extraction:

The trio was recruited from Sir Sunderlal Hospital, Banaras Hindu University with informed consent and the consent to publish the study findings keeping patient confidentiality. The study is approved by the Institute Ethical Committee of Institute of Science, Banaras Hindu University. The genomic DNA was isolated from peripheral blood samples using the standardized salting out method (14). DNA quality and quantity were estimated using both spectrophotometric (Nanodrop 2000, Thermo Scientific Inc.) and fluorometry-based (DNA Assay BR, Invitrogen, Cat# Q32853 / Qubit High Sensitivity Assay, Invitrogen,) methods.

Whole Exome Sequencing:

The SureSelect^{XT} Human All Exon V5+UTR kit was used for library preparation. The indexed captured libraries were on Illumina HiSeqX/Novaseq using 2 x 150bp paired-end reads. The raw sequencing data was assessed for quality control using FastQC. The reads were aligned to the human reference genome (GRCh37) using BWA aligner. Variant Calling was done using Sentieon's GATK Haplotypecaller and UnfiedGenotype. The variants were annotated using databases such as 1000G, dbSNP, ExAC, and gnomAD etc.

Variants' Filtration/ Variation in Candidate gene:

The annotated variants were filtered based on allele frequency, read depth, pathogenicity, and functional impact. The annotated variants were filtered based on ExAc allele frequency $\leq$ 0.05

and NA (not available), read depth ≥ 20, pathogenicity, and functional impact. A self made gene panel of 1209 kidney disease related genes was applied to the annotated data to find out the plausible causative variation common in affected members of the trio. The candidate variant was further validated by Sanger sequencing on ABI3730 capillary sequencer (Applied Biosystems) with a BigDye® Terminator version 3.1 cycle sequencing kit.

STRING analysis:

String networks of *PKD1* and *MIOX* were generated separately upto ten more additions. The common genes in both networks were picked and string network was generated to see possible interactions among them. The String interaction network of these common genes is shown in figure 3B.

Gene Expression Data Source

The GEO database, GSE7869, from which the microarray gene expression data from renal cysts of different sizes of five PKD1 patients was retrieved, includes small cysts (<1 ml, n = 5), medium cysts (10–20 ml, n = 5), large cysts (>50 ml, n = 3), minimally cystic tissue (MCT, n = 5), and non-cancerous renal cortical tissue from three nephrectomized kidneys with isolated renal cell carcinoma as normal control (n = 3). The samples were examined using the Human Genome U133 Plus 2.0 Array chip platform from Affymetrix.

Differential Gene Expression Analysis:

The raw data were normalized using the using R - RMA normalization followed by BiocManager::install (version = "3.12") BiocManager::install ("GEOquery") BiocManager::install ("affy") BiocManager::install ("hgu133a.db", type = "source") BiocManager::install ("hgu133acdf") Calling Libraries: library (GEOquery) library (affy) library (hgu133a.db) library (hgu133acdf). The limma function package of the R language (version 3.5.2) was used for the differentially expressed gene analysis (15), and the absolute logarithmic conversion of the differential expression multiple (Log2FC) value >2 and FDR 0.05 were used as screening criteria.

Results:Variants' Filtration/ Variation in Candidate gene:

There were no variations detected in the *PKD1, PKD2, DNAJB11, GANAB,* and *ALG9* candidate genes. *MIOX* was filtered out to have the frameshift-truncation deletion [c.32del/p.Leu11ArgfsTer61]. The heterozygous deletion variant of the *MIOX* was identified as the top possible disease causing variant. This variant was cross-validated bi-directionally by Sanger sequencing (figure 2A). The frameshift deletion leads to truncated protein of 70 amino acids as compared to wild protein of 285 amino acids. The alignment of 285aa long normal and 70aa long mutated MIOX protein sequence is shown in figure 2B.

Variants in other genes:

There were several other common variants in II-1 and III-2 obtained after filtering criteria with ClinVar status as benign or uncertain significance. Table 1 shows the common variants in proband (II-1) and affected daughter (III-2) on filtering and prioritization on the basis of self made gene panel of 1209 genes. These other shared variations of uncertain significance and benign variations in both candidates may likely to act as modifier in the disease progression.

Integrated Proteomics:

As per the information available on the databases (Proteomics DB and MOPED) the MIOX protein specifically expresses in the kidney (figure 3C).

STRING Analysis:

No direct interactions between PKD1, PKD2, and MIOX were generated in the STRING network. String networks of PKD1 and MIOX were generated separately upto ten further additions. The ACTN1, PARVB, PXN, PIK3R1, CTNNB1, MAPK3, HRAS, MTOR, PTEN, WNT1, IGF1R, KL proteins present in the PKD1 network upto ten additions were also present in

the MIOX network of ten additions. These common proteins in both networks were again studied to see the possible interactions among them. This interaction network is depicted in figure 3B.

Differential Gene Expression Analysis:

The normalized gene expression data of the cysts is shown in figure 4A. The analysis revealed that the cyst samples assembled together as a distinct group, while the minimal cystic tissues and normal renal cortical samples sorted together as a separate group (figure 4B). This indicates the similarity in the gene expression pattern between renal cysts of varying sizes, as well as between minimal cystic tissues and normal renal cortical tissue. In addition, the expression profile analysis of *MIOX* reveal that its expression level is reduced in cystic samples compared to minimal cystic tissues and control tissue samples, suggesting a potential role of this gene in the development of polycystic kidney disease.

Discussion:

Autosomal dominant polycystic kidney disease (ADPKD) is a genetic disorder characterized by progressive cyst formation and enlargement of the kidneys, often leading to end-stage kidney disease. The genetic basis of ADPKD is heterogeneous, with PKD1 (~75% of cases) and PKD2 (~15% of cases) being the most common loci, and *GANAB*, *DNAJB11*, and *ALG9* being minor genes (5,6). PKD is a ciliopathy, a disease associated with defects in the function of primary cilia, and many syndromic ciliopathies exhibit a PKD phenotype (16). Improving outcome, preventing complications, and initiating effective treatment rely heavily on accurate diagnosis. Molecular diagnosis plays a critical role in the management of the diseases. WES is now becoming the choice of quick and accurate diagnosis for PKD and practicing personalized medicine. Given the complexity of the disease genetic testing in combination with clinical phenotypes offers definitive diagnosis contributing to better prognosis, clinical care, diagnosis in atypical cases, and family planning (11,12,17). The genomic analysis of ADPKD in this study revealed another gene associated with it which emphasizes the importance of genetic testing and family studies for precise diagnosis and treatment. This research has added knowledge to the genetics of PKD, paving the way for the development of targeted therapies in the future.

This study using whole exome sequencing identified a heterozygous frameshift deletion [c.32del/p.Leu11ArgfsTer61, Exon 2], subsequently validated by Sanger sequencing, in *MIOX* in a trio consisting of a female in her 40s (proband), her husband (unaffected), and their daughter affected (in her early 20s) with ADPKD. The variant was screened using the dominant inheritance pattern. This deletion has not been previously reported as an ADPKD related variation. The frameshift deletion leads to a truncated protein of 70 amino acids as compared to the wild protein of 285 amino acids which disrupts the binding site according to primary structure prediction.

MIOX encodes for a 32Kda myo-inositol oxygenase (MIOX), which is a cytosolic enzyme expressed specifically in the renal proximal tubules, and is the first rate-limiting enzyme of myo-inositol catabolism. This enzyme is found to be upregulated in hyperglycemic conditions. MIOX is a single-domain protein with a mostly helical fold distantly related to the diverse HD domain superfamily. So far, studies have shown that MIOX plays a critical role in the metabolism of inositol, a carbohydrate molecule, and is involved in the regulation of glucose metabolism, insulin signaling, and oxidative stress response (13). Studies have suggested the role of *MIOX* in insulin signaling in the renal proximal tubule cells and may play a role in the development of diabetic kidney disease (18). Additionally, MIOX has been found to be involved in the regulation of oxidative stress, which can contribute to kidney injury in various disease states. *MIOX* promoter contains several response elements: oxidant-, antioxidant-, osmotic-, carbohydrate-, sterol-, response elements (18). While the role of *MIOX* has been linked to acute kidney injury, tubulointerstitial renal fibrosis, diabetic-associated nephropathies, and reactive oxygen species (ROS) generation (figure 3A), its role in ADPKD has not yet been reported (13,19,20)(19–21). Recently, higher expression of *MIOX* has been reported in prostate adenocarcinoma (22). The STRING interaction network showed that there are no direct interactions between *PKD1*, *PKD2*, and *MIOX* proteins, indicating that this particular area has not been extensively explored. However, there are several common interacting proteins that are present in their respective networks (figure 3B).

The other shared variations of uncertain significance and benign listed in Table 1 may potentially act as modifiers of disease progression, but their significance and role in the development of

ADPKD remain uncertain. Some of these variations may be benign, while others may have a subtle impact on disease severity or presentation.

As for *MIOX*, previous studies have explored the effects of overexpression and knockdown of *MIOX* in diabetic conditions. The current study identified a heterozygous frame shift deletion. This deletion leads to a premature termination of the MIOX protein, resulting in a truncated protein (70aa) that is much shorter than the wild-type MIOX protein (285aa). One possible impact of this deletion could be haploinsufficiency, where a single functional copy of the gene is insufficient to produce the required amount of functional protein necessary for normal cellular processes. This may lead to a reduction in the amount of functional MIOX protein below a threshold level, which could potentially trigger cyst formation. The other possibility could be a dominant-negative effect where the truncated protein created by heterozygous deletion may interfere with the function of the normal protein. This can disrupt the activity of protein complexes or signaling pathways, leading to disease.

The finding of a heterozygous frame-shift deletion in the *MIOX* in the ADPKD patient suggests that this gene may be involved in the development of polycystic kidney disease. This is further supported by the gene expression profile analysis of the data of cysts of variable sizes from GEO database, which shows that the expression level of *MIOX* gene is reduced remarkably in cystic samples compared to minimal cystic tissues (MCT) and control tissue samples (figure 4E). These results indicate that the down-regulation of *MIOX* expression may play a significant role in the development of PKD. In addition to this, the down regulation of Klotho (KL) protein in the reference study done by Song X et al. in 2009 (23) is noteworthy, as its direct STRING interaction with MIOX can be seen in our STRING interaction network (figure 3B & 4F). The *KL* encoded protein is a type-I membrane protein which is related to beta-glucosidases. Decreased expression of this KL protein has been reported in individuals with chronic renal failure. This suggests that the down-regulation of KL protein may be linked to the reduced expression of *MIOX* and further investigation into the relationship between these genes may shed light on their role in PKD pathogenesis. Overall, these findings highlight the importance of understanding the complex interplay between various genes and their expression profiles in the development and progression of PKD.

Overall, identification of this mutation in *MIOX* in an ADPKD trio study provides a potential avenue for further exploratory studies into the genetic underpinnings of ADPKD. Future functional evaluations of the *MIOX* variation will be necessary to determine if and how this gene is involved in the progression of ADPKD.

Conclusion:

This study identifies a frame-shift deletion [c.32del/p.Leu11ArgfsTer61] using whole exome sequencing in *MIOX*, reconfirmed by Sanger sequencing as the most likely cause of the disease shared by both affected individuals in a trio which is not earlier reported in ADPKD. No pathogenic variation(s) was found in candidate genes *PKD1, PKD2, DNAJB11, GANAB, and ALG9.* The frame-shift deletion results in a truncated protein with only 70 amino acids, which disrupts the binding site according to primary structure prediction. The differential gene expression analysis also showed reduced expression of *MIOX* in cysts samples. Further functional investigation is needed to determine the involvement of the *MIOX* variation in disease progression.

Acknowledgement:

We acknowledge the funding support obtained from Department of Biotechnology (DBT) and Indian Council of Medical Research (ICMR), India. We thank the participants for their involvement in this study. We also acknowledge Mr. Prashant Ranjan, ICMR-SRF, Centre for Genetic Disorders, Institute of Science, Banaras Hindu University, for his contribution in Differential Gene Expression analysis done in this study.

Conflict of Interest:

The authors declare no conflict of interest.

References:

1. Nobakht N, Hanna RM, Al-Baghdadi M, Ameen KM, Arman F, Nobahkt E, et al. Advances in autosomal dominant polycystic kidney disease: a clinical review. Kidney Med. 2020;2(2):196–208.
2. Torres VE, Bennett WM. Autosomal dominant polycystic kidney disease (ADPKD) in adults: Epidemiology, clinical presentation, and diagnosis. Uptodate Waltham, MA Uptodate Inc http//www uptodate com (Accesed December 27, 2019).
3. Lanktree MB, Guiard E, Li W, Akbari P, Haghighi A, Iliuta I-A, et al. Intrafamilial variability of ADPKD. Kidney Int Reports. 2019;4(7):995–1003.

4. Cornec-Le Gall E, Olson RJ, Besse W, Heyer CM, Gainullin VG, Smith JM, et al. Monoallelic mutations to DNAJB11 cause atypical autosomal-dominant polycystic kidney disease. Am J Hum Genet. 2018;102(5):832–44.

5. Hopp K, Cornec-Le Gall E, Senum SR, Te Paske IBAW, Raj S, Lavu S, et al. Detection and characterization of mosaicism in autosomal dominant polycystic kidney disease. Kidney Int. 2020;97(2):370–82.

6. Lanktree MB, Haghighi A, di Bari I, Song X, Pei Y. Insights into autosomal dominant polycystic kidney disease from genetic studies. Clin J Am Soc Nephrol. 2021;16(5):790–9.

7. Mallawaarachchi AC, Lundie B, Hort Y, Schonrock N, Senum SR, Gayevskiy V, et al. Genomic diagnostics in polycystic kidney disease: an assessment of real-world use of whole-genome sequencing. Eur J Hum Genet. 2021;29(5):760–70.

8. Pei Y, Hwang Y-H, Conklin J, Sundsbak JL, Heyer CM, Chan W, et al. Imaging-based diagnosis of autosomal dominant polycystic kidney disease. J Am Soc Nephrol. 2015;26(3):746–53.

9. Harris PC, Ward CJ, Peral B, Hughes J. Polycystic kidney disease. 1: Identification and analysis of the primary defect. J Am Soc Nephrol. 1995;6(4):1125–33.

10. Cornec-Le Gall E, Torres VE, Harris PC. Genetic complexity of autosomal dominant polycystic kidney and liver diseases. J Am Soc Nephrol. 2018;29(1):13–23.

11. Zacchia M, Blanco FDV, Trepiccione F, Blasio G, Torella A, Melluso A, et al. Nephroplex: a kidney-focused NGS panel highlights the challenges of PKD1 sequencing and identifies a founder BBS4 mutation. J Nephrol. 2021;34(6):1855–74.

12. Du N, Dong D, Sun L, Che L, Li X, Liu Y, et al. Identification of ACOT13 and PTGER2 as novel candidate genes of autosomal dominant polycystic kidney disease through whole exome sequencing. Eur J Med Res. 2021;26(1):1–8.

13. Deng F, Sharma I, Dai Y, Yang M, Kanwar YS. Myo-inositol oxygenase expression profile modulates pathogenic ferroptosis in the renal proximal tubule. J Clin Invest. 2019;129(11):5033–49.

14. Raj S, Singh RG, Das P. Mutational screening of PKD1 and PKD2 in Indian ADPKD patients identified 95 genetic variants. Mutat Res Mol Mech Mutagen. 2020;821:111718.

15. Ritchie ME, Phipson B, Wu DI, Hu Y, Law CW, Shi W, et al. limma powers differential expression analyses for RNA-sequencing and microarray studies. Nucleic Acids Res. 2015;43(7):e47–e47.

16. McConnachie DJ, Stow JL, Mallett AJ. Ciliopathies and the kidney: a review. Am J Kidney Dis. 2021;77(3):410–9.

17. Odland D. A patient perspective on genetic testing for ADPKD: the lack of complete genetic information, especially early in the course of the disease, is harming adult autosomal dominant polycystic kidney disease (ADPKD) patients. Vol. 16, Clinical Journal of the American Society of Nephrology. Am Soc Nephrol; 2021. p. 671–3.

18. Tominaga T, Dutta RK, Joladarashi D, Doi T, Reddy JK, Kanwar YS. Transcriptional and translational modulation of myo-inositol oxygenase (Miox) by fatty acids: implications in renal tubular injury induced in obesity and diabetes. J Biol Chem. 2016;291(3):1348–67.

19. Tominaga T, Sharma I, Fujita Y, Doi T, Wallner AK, Kanwar YS. Myo-inositol oxygenase accentuates renal tubular injury initiated by endoplasmic reticulum stress. Am J Physiol Physiol. 2019;316(2):F301–15.

20. Sharma I, Deng F, Liao Y, Kanwar YS. Myo-inositol oxygenase (MIOX) overexpression drives the progression of renal tubulointerstitial injury in diabetes. Diabetes. 2020;69(6):1248–63.

21. Sharma I, Liao Y, Zheng X, Kanwar YS. Modulation of gentamicin-induced acute kidney injury by myo-inositol oxygenase via the ROS/ALOX-12/12-HETE/GPR31 signaling pathway. JCI insight. 2022;7(6).

22. Liu W, Xiang J, Wu X, Wei S, Huang H, Xiao Y, et al. Transcriptome Profiles Reveal a 12-Signature Metabolic Prediction Model and a Novel Role of Myo-Inositol Oxygenase in the Progression of Prostate Cancer. Front Oncol. 2022;12.

23. Song X, Di Giovanni V, He N, Wang K, Ingram A, Rosenblum ND, et al. Systems biology of autosomal dominant polycystic kidney disease (ADPKD): computational identification of gene expression pathways and integrated regulatory networks. Hum Mol Genet. 2009;18(13):2328–43.

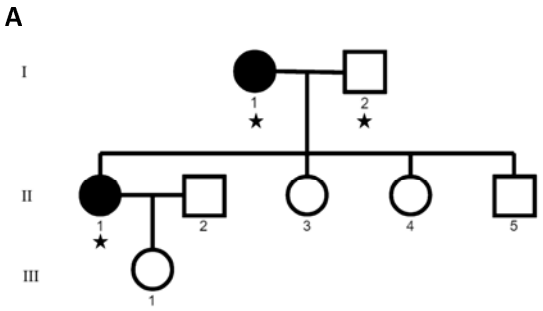

Figure 1: Recruitment of the study subjects. A) Pedigree of the ADPKD subject. Star (★) indicates the the trio undergone WES.

Gene Name	VAR-Class	cDNA Change	AA Change	VEP VAR Impact	ClinVar rsid	ClinVar Origin	ClinVar Significance	ExAC Overall AF	Role in
CTD-2256P15.4 Chr5	EXONIC-NC	n.1797C>T	NA	Modifier	NA	Germline	Uncertain significance	NA	lncRNAs
PKHD1	INTRONIC	c.10156+22835C>A	MODIFIER	Modifier	NA	NA	NA	NA	Ciliogenesis
NPHP4	MISSENSE	c.2021G>T	p.Arg674Leu	Moderate	rs375416303	Germline	Likely benign, uncertain significance	0.000977	renal tubular development and function
AGT	3UTR	c.*556C>A	NA	Modifier	rs7079	Germline	Benign	NA	renal tubular development
BBS7	3UTR	c.*1286G>A	NA	Modifier	rs1507996	Germline	Benign	NA	BBSome complex is required for ciliogenesis
BBS7	3UTR	c.*690T>C	NA	Modifier	rs3217753	Germline	Benign	NA	
PKHD1	3UTR	c.*3393C>A	NA	Modifier	rs2784198	Germline	Benign	NA	

SEC63	**3UTR**	**c.*1685A>C**	**NA**	**Modifier**	**rs558069212**	**Germline**	**Uncertain significance**	**NA**	**Polycystic Liver Disease 2**
CEP164	**MISSENSE**	**c.3364C>T**	**p.Arg1122Cys**	**Moderate**	**rs149875085**	**Germline**	**Benign/ likely benign**	**0.001659**	**nephronophthisis-related ciliopathies**
CEP164	**MISSENSE**	**c.3716C>T**	**p.Pro1239Leu**	**Moderate**	**rs61995733**	**Germline**	**Benign**	**0.011193**	
MIOX Chr22	**FRAMESHIFT-DEL**	**c.32del**	**p.Leu11ArgfsTer61**	**High**	**NA**	**NA**	**None yet**	**0.000125**	**myoinositol catabolism, occurs predominantly in the kidney.**

Table 1: Common variants in II-1 and III-2 obtained after filtering criterias : Table shows the common variants in proband (II-1) and affected daughter (III-2) on filtering and prioritization on the basis of self made gene panel of 1209 genes. The heterozygous deletion variant of the *MIOX* was identified as the top possible disease causing variant. Other shared variations of uncertain significance and benign variations in both candidates may act as modifier in the disease progression. NA-Not Available

A

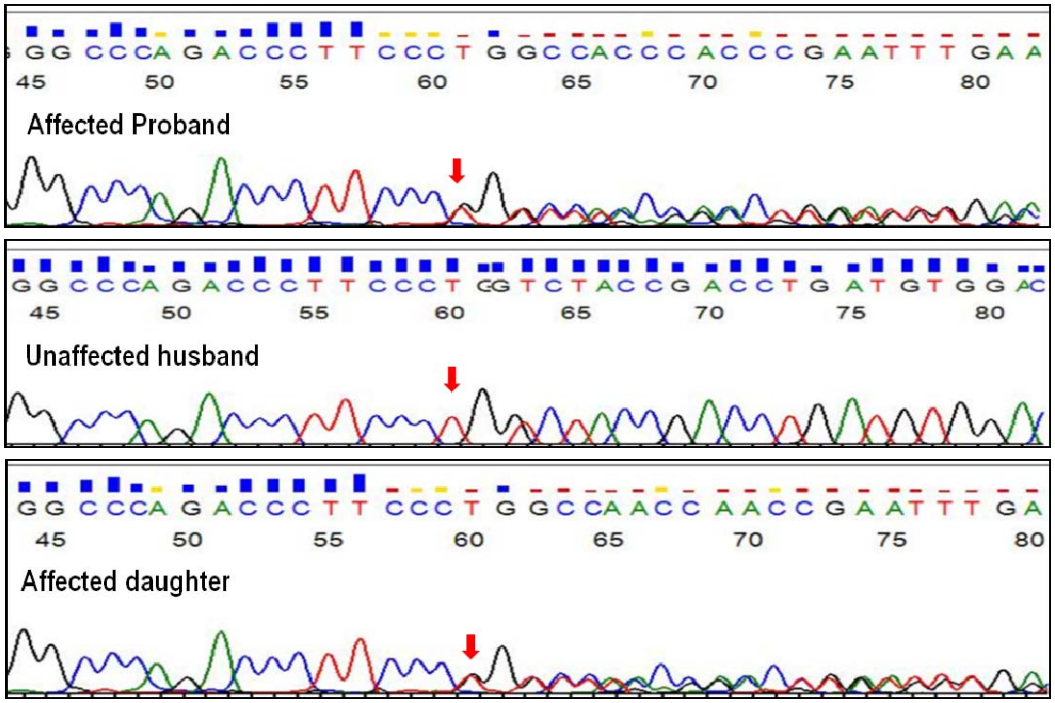

B

```
CLUSTAL W formatted alignment obtained with AlignMe 1.2.2

MIOX285_______    MKVTVGPDPSLVYRPDVDPEVAKDKASFRNYTSGPLLDRVFTTYKLMHTHQTVDFVRSKH
MIOX70________    MKVTVGPDPSRSTDLMWTQRWPKTRPASGTTRQVPSWT--------VSSPPTSSCTRTRQ
                  a*********            *           *                *    *

MIOX285_______    AQFGGFSYKKMTVMEAVDLLDGLVDESDPDVDFPNSFHAFQTAEGIRKAHPDKDWFHLVG
MIOX70________    WTSSGASMPSLGASPTRK-------------------------------------------
                      * *

MIOX285_______    LLHDLGKVLALFGEPQWAVVGDTFPVGCRPQASVVFCDSTFQDNPDLQDPRYSTELGMYQ
MIOX70________    ------------------------------------------------------------

MIOX285_______    PHCGLDRVLMSWGHDEYMYQVMKFNKFSLPPEAFYMIRFHSFYPWHTGRDYQQLCSQQDL
MIOX70________    ------------------------------------------------------------

MIOX285_______    AMLPWVREFNKFDLYTKCPDLPDVDKLRPYYQGLIDKYCPGILSW
MIOX70________    ---------------------------------------------
```

Figure 2: Sanger sequencing confirmation and alignment of normal (Miox285) and mutated (Miox70) protein sequence. A) Sanger sequencing confirmed the heterozygous deletion variant in the proband and affected daughter. Red arrow points the variant base. B) The alignment of normal (Miox285) and mutated (Miox70) protein sequence The Asterisks (*) represents the matched amino acids. Red and blue arrows indicate the amino acid change due to nucleotide change and truncation position respectively. Frame-shift deletion leads to truncated protein of 70 amino acids as compared to wild protein of 285 amino acids.

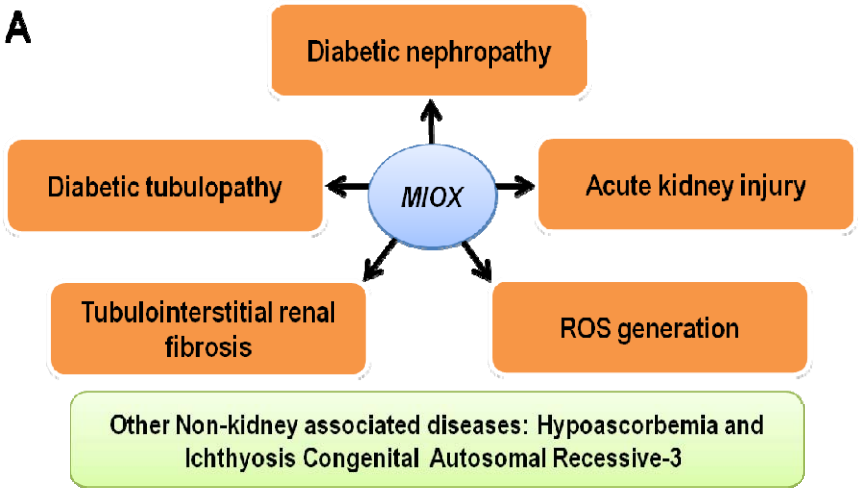

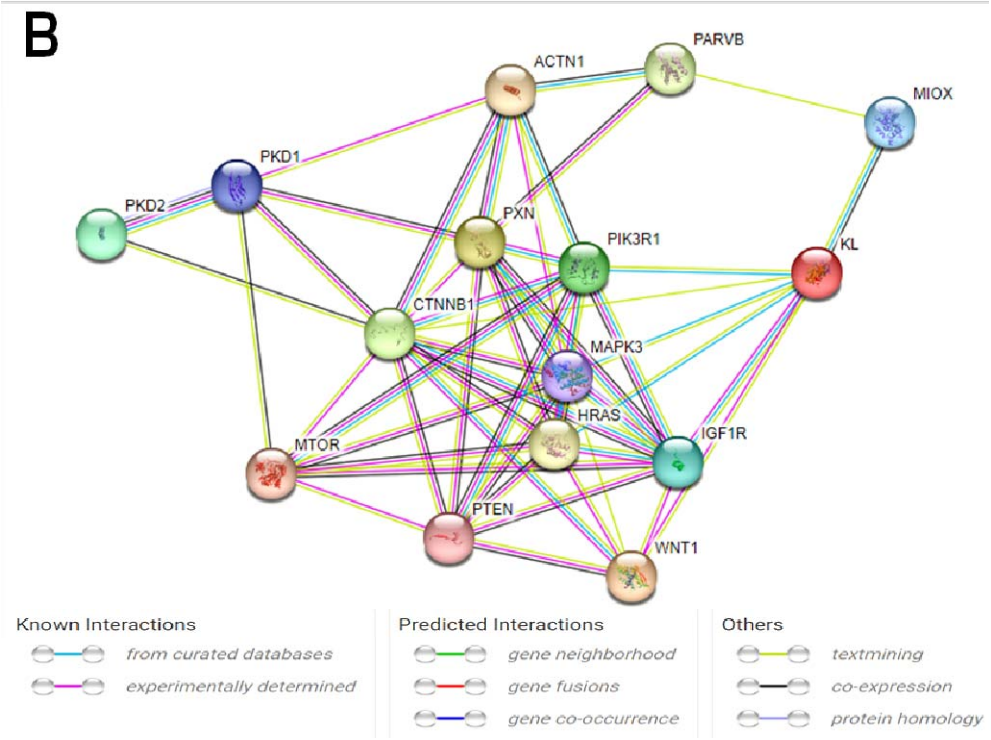
B
PARVB
ACTN1
MIOX
PKD1
PKD2
PXN
PIK3R1
KL
CTNNB1
MAPK3
HRAS
IGF1R
MTOR
PTEN
WNT1
Known Interactions
from curated databases
experimentally determined
Predicted Interactions
gene neighborhood
gene fusions
gene co-occurrence
Others
textmining
co-expression
protein homology

C

Figure 3: Role of MIOX protein. A) Association of *MIOX* in kidney and non-kidney diseases. B) Representative image depicting different types of interactions among common genes in *PKD1* and *MIOX* STRING interaction networks. C) Integrated Proteomics: protein expression in normal tissues and cell lines from Proteomics DB and MOPED for *MIOX*.

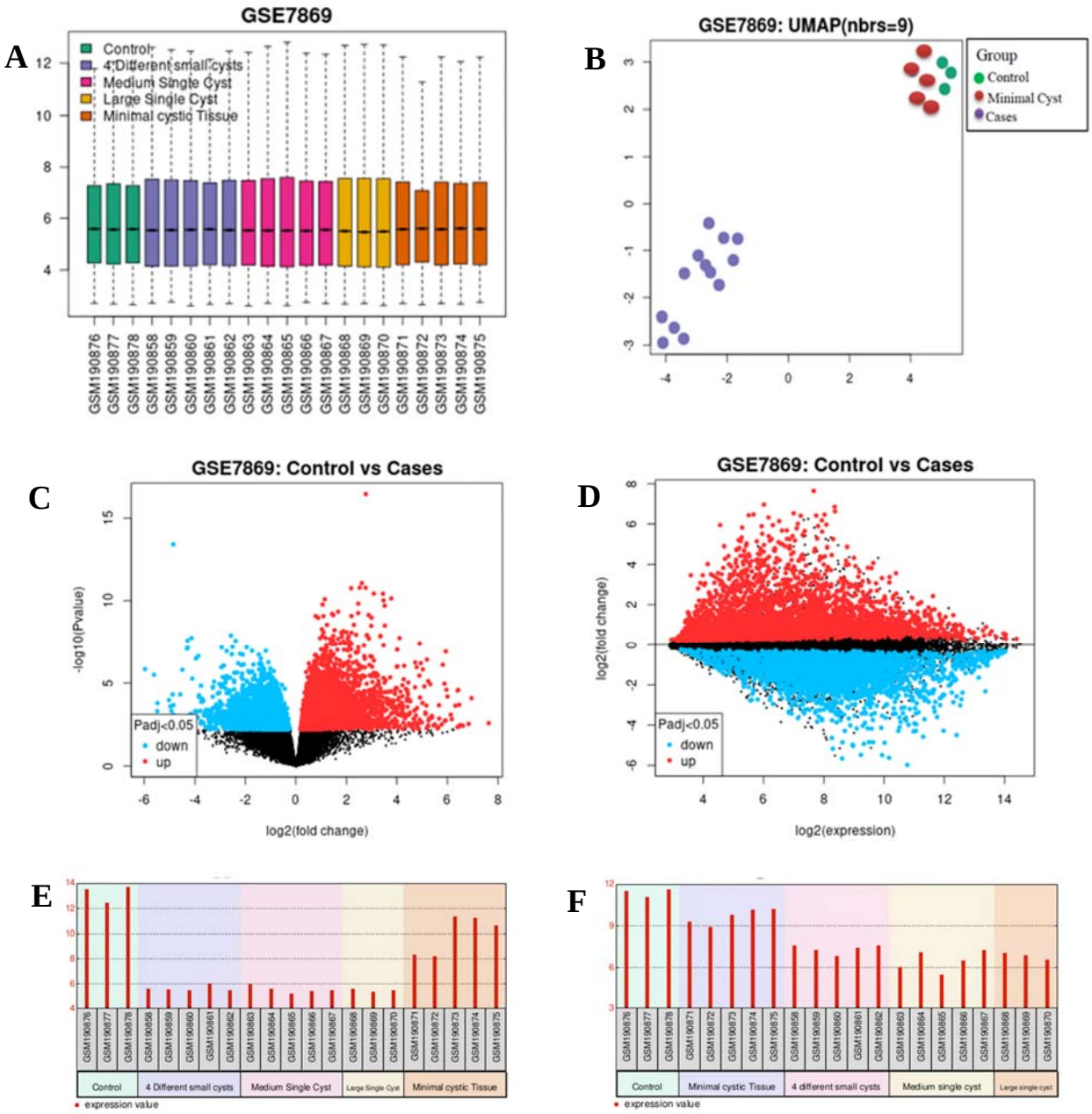

Figure 4: *MIOX* differential expression study in PKD1 cysts. A) Samples are colored based on groupings. Median-centered values indicate that the data are cross-comparable and normalized. B) The dimension reduction method known as uniform manifold approximation and projection (UMAP) representing the relationships between different cyst samples. C & D) The differentially expressed genes are depicted by volcano and mean difference plot. The red and sky-blue dots reflect up regulated and down regulated genes respectively. E) Expression of *MIOX* in cystic samples of ADPKD patients is down regulated as compared to minimal cystic tissues and control tissue samples. F) *KL* gene expression is down regulated as compared to minimal cystic tissues and control tissue samples.