medRxiv preprint doi: https://doi.org/10.1101/2022.07.06.22277303; this version posted July 7, 2022. The copyright holder for this preprint (which was not certified by peer review) is the author/funder, who has granted medRxiv a license to display the preprint in perpetuity. All rights reserved. No reuse allowed without permission.

Quantifying the impact of vaccines and booster doses on COVID-19 in the U.S.

Hemaho B. Taboe[a], Michael Asare-Baah[b,e], Enahoro A. Iboi[c], Calistus N. Ngonghala[d,e,*]

[a] *Laboratoire de Biomathématiques et d'Estimations Forestières, University of Abomey-Calavi, Cotonou, Bénin*
[b] *Department of Epidemiology, University of Florida, 2004 Mowry Road, Gainesville, FL 32610, USA.*
[c] *School of Mathematical and Statistical Sciences, Arizona State University, Tempe, AZ, 85287, USA.*
[d] *Department of Mathematics, University of Florida, Gainesville, FL 32611, USA.*
[e] *Emerging Pathogens Institute, University of Florida, Gainesville, FL 32610, USA.*

Abstract

The 2019 coronavirus (COVID-19) pandemic continues to have a devastating impact on health systems and economies across the globe, with the United States (U.S.) among the worse impacted nations. Implementing public health measures in tandem with effective vaccination strategies is instrumental in halting the transmission of the virus and curtailing the burden of the pandemic. Currently, the U.S. Food and Drug Administration has authorized the use of the Pfizer-BioNTech, Moderna, and the Johnson & Johnson vaccines to prevent COVID-19 in the U.S. However, these vaccines have varying efficacies ($\approx$ 95% for the Pfizer-BioNTech and Moderna vaccines and $\approx$ 70% for the Johnson & Johnson vaccine) and waning effects against major COVID-19 strains, hence, understanding their impact on the incidence of COVID-19 in the U.S. is critical. Here, we formulate and use mathematical models 1) to investigate the impact of each vaccine type and booster doses (single/double) on the incidence of COVID-19 in the U.S., and 2) to predict future trends of the disease in the U.S., if existing control measures are reinforced or relaxed. The models are fitted to part of the new daily confirmed case data from the U.S., and validated using the remaining part of the daily data, as well as the full cumulative case data. The fitting and numerical simulations of the models show a 44% (71%) reduction in the reproduction number (number of new daily confirmed cases) at the peak during the wave in which vaccination peaked compared to the preceding wave. Additionally, the estimated disease transmission rate is $\approx$ 3 times higher for the Omicron variant. Simulations of the model show that in the absence of booster shots, the time to elimination of community transmission in the U.S. would have increased by at least two months compared to the baseline case. However, had more people (i.e., 70% of the fully vaccinated population) been boosted by mid-August 2021, $\approx$ 78% of the daily incidence could have been prevented as at the time the first case of Omicron was reported in the U.S. Our findings suggest that booster shots with the Pfizer-BioNTech or Moderna vaccines conferred superior protection than those with the Johnson & Johnson vaccine. Furthermore, the simulations show that the baseline value of the new daily cases at the peak of the Omicron variant in January 2022 would have dropped significantly (by $\approx$ 20%) if a fourth dose of the Pfizer-BioNTech or Moderna vaccine was administered at the start of the Omicron wave. Specifically, three million cumulative cases in the U.S. could have been averted between late November 2021 and March 2022. The study proves that early administration of vaccines and booster doses could have significantly reduced the surge in cases and the observed peak size. In particular, we showed that, while late boosting will result in an increase in the number of cases (compared to the baseline value), early boosting will lead to a decrease in the number of cases. Additionally, we showed that a second booster dose using the Pfizer-BioNTech or Moderna vaccine is important in curtailing the burden of the pandemic in the U.S. Particularly if this second dose is administered soon after the first dose. Furthermore, the study shows that early relaxation of existing control measures can lead to a more devastating wave, especially if both vaccination and transmission rate reducing measures such as mask-use are relaxed simultaneous.

Keywords: COVID-19 pandemic; Vaccine efficacy; Booster doses; Delta and Omicron variants; Waning vaccine-derived and natural immunity; Infectious disease models.

1. Introduction

The coronavirus disease (COVID-19) caused by severe acute respiratory syndrome coronavirus-2 (SARS-CoV-2) has been a significant global public health concern since its emergence in December 2019 in Wuhan, China [1]. The outbreak was declared a global pandemic by the World Health Organization (WHO) on March 11, 2020 [2]. While the implementation of non-pharmaceutical interventions (NPIs) and the roll-out of authorized vaccines have been the mainstay public health strategy in curtailing the pandemic across the globe, the spread of the disease continues to have a devastating impact on healthcare systems and economies worldwide [3, 4], with over 552.2 million cases and 6.3 million deaths as

* Corresponding author: Calistus Ngonghala, Email calistusnn@ufl.edu

NOTE: This preprint reports new research that has not been certified by peer review and should not be used to guide clinical practice.

medRxiv preprint doi: https://doi.org/10.1101/2022.07.06.22277303; this version posted July 7, 2022. The copyright holder for this preprint (which was not certified by peer review) is the author/funder, who has granted medRxiv a license to display the preprint in perpetuity. All rights reserved. No reuse allowed without permission.

of June 30, 2022 [5]. The pandemic has had ravaging effect in the United States, being the most impacted nation, with over 89.2 million cases and over 1 million deaths as of June 30, 2022 [5, 6].

In curtailing the transmission of infectious pathogens, vaccination stands out as a time-tested, cost-effective, and successful measure against many infectious diseases [7–10]. Mass vaccination is one of the promising mitigating measures for COVID-19 and a strategy for generating herd immunity [11]. However, the success of this strategy may be challenged by factors such as vaccine hesitancy [12, 13], vaccine supply and roll-out, and the emergence of new and resistant variants that might be more transmissible and to which existing vaccines may not offer sufficient cross-protection [3, 7, 11].

Currently, in the United States (U.S.), Pfizer-BioNTech, Moderna, and Janssen (Johnson & Johnson) vaccines have been approved by the Food and Drug Administration (FDA) for use against COVID-19 following multiple successful clinical trials [4, 14]. The FDA granted an emergency use authorization for Pfizer-BioNTech, Moderna, and Janssen vaccines on December 11, 2020, December 18, 2020, and February 27, 2021, respectively, [4] and final approval on August 23, 2021 for the Pfizer-BioNTech (COMIRNATY) vaccine and January 31,2022 for the Moderna (Spikevax) vaccine [16]. The adenovirus-based Janssen vaccine requires a single dose, while the messenger ribonucleic acid (mRNA) vaccines (i.e., the Pfizer-BioNTech and Moderna vaccines) require two doses to achieve full and durable protection. The initial dose is expected to prime the immune system, while the second dose provides an immune booster and enhances cross-protective activity against some variants of concern (e.g., Delta and Omicron.) [17–19]. With high efficacies of $\approx 95\%$ for the mRNA vaccines and $\approx 70\%$ for the adenovirus-based vaccine against the non-variant (wild-type) strain of SARS-CoV-2, these vaccines have effectively prevented moderate to severe symptomatic disease, hospitalization, and death [10, 14, 17, 20, 21]. Although, they were expected to contribute in halting the pandemic by driving the population to attain herd immunity [6, 22], their effectiveness in achieving this has been challenged by many factors including vaccine hesitancy and the emergence of new SARS-CoV-2 variants of concern. At the time of writing, 78.3% of the total U.S. population had received at least one dose of the recommended vaccines, with 66.9% of this fully vaccinated [23]. Although these approved COVID-19 vaccines are effective against symptomatic laboratory-confirmed COVID-19 cases caused by the non-variant (wild-type) strain and some strains like the B.1.1.7 (Alpha), their efficacy may wane over time [3]. These vaccines are likely to have reduced potency against mutant variants like B.1.617.2 (Delta) and B.1.1.529 (Omicron), which are more virulent and highly transmissible and are widely in circulation in the U.S. [22, 24]. The administration of a booster dose may be necessary for conferring full protection and mitigating the waning effect of the vaccine over time[25, 26]. Based on evidence of breakthrough infections, the FDA, on September 22, 2021, authorized the use of booster doses for the Pfizer-BioNTech COVID-19 vaccine and subsequently issued approval for the Moderna and Janssen vaccines on October 20, 2021 [14]. The booster doses are administered as a single dose at least five months after completing the initial COVID-19 vaccination series of two doses for the mRNA vaccines and at least two months after the standard single dose for the Janssen vaccine. As of June 29, 2022, 47.8% of the U.S. population fully vaccinated have received the first booster dose [14]. The CDC also recommends a second booster dose (fourth dose for mRNA vaccine-receivers and third dose for Janssen vaccine-receivers) for moderate or severely immunocompromised individuals who are 12 years and older. The second booster is recommended to be administrated at least 3 months after the first booster shot, and except in some particular cases, the mRNA must be used for the second booster [15]. By late June 2022, 27% of eligible population for the second booster have received it [14].

Several mathematical modeling frameworks have been used to understand the impact of vaccination on the transmission dynamics of COVID-19. A two-strain and two-group mathematical model was developed in [27] and used to assess the impact of vaccination and vaccine-induced cross-protection against the B.1.1.7 and other SARS-CoV-2 variants circulating in the U.S. The study shows that future waves of the COVID-19 pandemic can be prevented in the U.S. if the existing vaccines offer moderate level of cross-protection against the variant. Iboi *et al.* [28] used a deterministic model to assess the impact of a hypothetical imperfect COVID-19 vaccine on the transmission dynamics of the COVID-19 pandemic in the United States. Their results show that the prospect of eliminating the local transmission of COVID-19 in the U.S. using the hypothetical vaccine is greatly enhanced if the vaccination program is combined with other interventions such as face mask usage and/or social distancing. A compartmental model was developed in [29] and associated with COVID-19 data from Italy to compute the time profile of healthcare system costs, hospitalization, and intensive care unit occupancy and deaths. The model was also used to compare different vaccination scenarios and to assess the effect of mass vaccination campaigns as a function of the reproduction number due to SARS-CoV-2 variants. A two-group mathematical model (based on face-mask use in public) for assessing the population-level impact of the approved COVID-19 vaccines on the COVID-19 pandemic was developed and analyzed in [30]. The study shows that waning of natural and vaccine-derived immunity against COVID-19 induces only a marginal increase in the burden and the time-to-elimination of the pandemic. Moore *et al.* [31] used an age-structured vaccination model to assess the possibility

medRxiv preprint doi: https://doi.org/10.1101/2022.07.06.22277303; this version posted July 7, 2022. The copyright holder for this preprint (which was not certified by peer review) is the author/funder, who has granted medRxiv a license to display the preprint in perpetuity. All rights reserved. No reuse allowed without permission.

of SARS-CoV-2 mortality or quality-adjusted life-year (QALY) losses in the UK. Their results show that vaccinating the older population has the most significant impact in reducing mortality. Islam *et al.* [32] used a model that accounted for the influence of age stratification and time-dependent infectivity to evaluate various vaccination strategies in the U.S. Their findings suggest that the CDC's vaccine-allocation strategy is not optimal. To our knowledge, the impact of each vaccine on the dynamics of COVID-19 in the U.S. has not been evaluated comprehensively.

In this study, we develop and use compartmental models together with data on new daily confirmed and cumulative COVID-19 cases in the U.S. to assess the impact of 1) the one-dose Johnson & Johnson and the two-dose mRNA vaccines licensed for use in the U.S.; 2) the number of booster vaccine doses; and 3) early implementation or relaxation of vaccine and transmission rate reducing control measures such as masking-up on the burden and future trajectory of COVID-19 in the U.S. (driven by the major circulating variants).

2. Methods

We developed three different model frameworks to reflect the dynamics of COVID-19 in the U.S. The models consisted of 1) a basic model with no vaccination, 2) a modified version of the basic model that accounts for the one- and two-dose vaccines and the waning effect of vaccine-derived immunity, and 3) an extended version of the model in 2) that accounts for booster vaccine doses.

2.1. The basic model

The basic model consists of the typical transmission model of the virus in a human population, with the exception that a confirmed case class is included. Here, the total human population (N) is broken down into susceptible (S), exposed (E), pre-symptomatic (E_p), Symptomatic infectious (I_s), asymptomatic infectious (I_a), confirmed (I_c), hospitalized (I_h), and recovered (R) individuals. All humans enter the susceptible class at a rate Λ *humans per day*, while natural death in each of the classes is at per capita rate μ *per day* (i.e., $1/\mu$ is the average human life span). Susceptible humans acquire the infection through contacts with E_p, I_s, I_a, I_c, I_h individuals at rate $\beta_p I_p/N$, $\beta_s I_s/N$, $\beta_a I_a/N$, $\beta_c I_c/N$, and $\beta_h I_h/N$ *per day*, respectively. Hence, the rate at which susceptible humans are infected (i.e., the force of infection) is:

$$\lambda = \frac{\beta_p E_p + \beta_s I_s + \beta_a I_a + \beta_c I_c + \beta_h I_h}{N}. \tag{2.1}$$

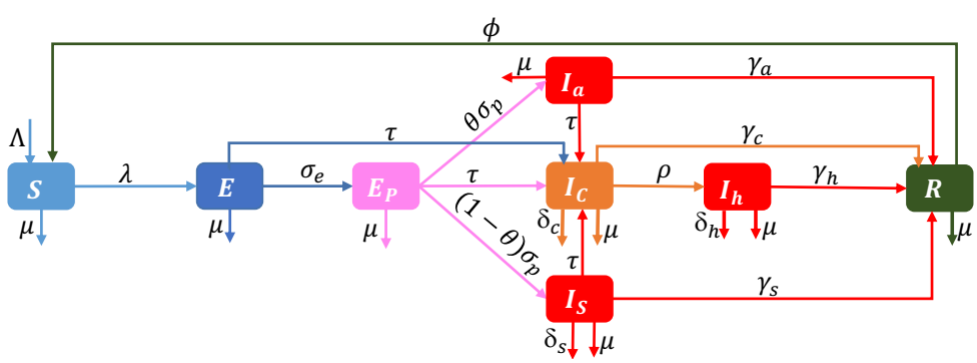

Fig. 1: Schematic depiction of the basic model. The human population is partitioned into susceptible (S), exposed (E), pre-symptomatic infectious (E_p), Symptomatic infectious (I_s), asymptomatic infectious (I_a), confirmed (I_c), hospitalized (I_h), and recovered (R) individuals. The other variables are as described in Section 1 and Table S1 of the SI, while the model parameters are described in the text and Table S2 of the SI.

Exposed individuals progress to the pre-symptomayic class at per capita rate σ_e *per day*, (i.e., $1/\sigma_e$ is the average latent period), while pre-symptomatic individuals progress to the symptomatic infectious class at rate $\theta\sigma_p$ *per day* or to the asymptomatic infectious class at rate $(1-\theta)\sigma_p$ *per day*, where $0 < \theta \leq 1 (0 < 1-\theta \leq 1)$ is the proportion of pre-symptomatic individuals who develop (do not develop) disease symptoms at the end of the incubation period and $1/\sigma_p$ is the average pre-symptomatic period. The compartment for confirmed cases (I_c) is conformed with confirmed cases from prevailing public health data and therefore is important for fitting our model to the observed data. This class is populated by individuals, who test positive for COVID-19 from the E, E_p, I_a, or I_s class at per capita rate τ *per day*. Individuals from this class either become hospitalized (i.e: individuals with confirmed infections that are treated in a healthcare setting

medRxiv preprint doi: https://doi.org/10.1101/2022.07.06.22277303; this version posted July 7, 2022. The copyright holder for this preprint (which was not certified by peer review) is the author/funder, who has granted medRxiv a license to display the preprint in perpetuity. All rights reserved. No reuse allowed without permission.

or hospital) at rate ρ *per day*, or recover from infection to join the R class at per capita rate, γ_c *per day* ($1/\gamma_c$ is the average duration of the infectious period for confirmed cases). Symptomatic (asymptomatic) infectious individuals recover at rate γ_s (γ_a) *per day*, while natural immunity wanes at rate ϕ *per day* (i.e., $1/\phi$ is the average duration of natural immunity to COVID-19). Individuals in the I_s, I_c, and I_h classes die from COVID-19 at rates δ_s, δ_c, and δ_h *per day*, respectively. The flow diagram of the model is presented in Figure 1, the variables and parameters are described in Tables S1 and S2 of the online supplementary information (SI), while the model is described by the system of equations (2.2).

$$\begin{aligned}
\dot{S} &= \Lambda + \phi R - \lambda S - \mu S, \\
\dot{E} &= \lambda S - (\tau + \sigma_e + \mu) E, \\
\dot{E_p} &= \sigma_e E - (\tau + \sigma_p + \mu) E_p, \\
\dot{I_a} &= \theta \sigma_p E_p - (\tau + \gamma_a + \mu) I_a, \\
\dot{I_s} &= (1-\theta)\sigma_p E_p - (\tau + \gamma_s + \delta_s + \mu) I_s, \\
\dot{I_c} &= \tau (E + E_p + I_a + I_s) - (\rho + \gamma_c + \delta_c + \mu) I_c, \\
\dot{I_h} &= \rho I_c - (\gamma_h + \delta_h + \mu) I_h, \\
\dot{R} &= \gamma_a I_a + \gamma_s I_s + \gamma_c I_c + \gamma_h I_h - (\phi + \mu) R.
\end{aligned} \tag{2.2}$$

2.2. The vaccination model (extended basic model to account for vaccination and waning vaccine-derived immunity)
In this section, the basic model (2.2) is extended to account for vaccination of susceptible individuals using either the Johnson & Johnson vaccine (administered as a single dose) and Pfizer-BioNTech or Moderna vaccine (administered in two-doses). The susceptible population is split into individuals who are unvaccinated (S_u), vaccinated with the Johnson & Johnson vaccine (S_{v0}) at rate (ν_0 *per day*), vaccinated with the first dose of the Pfizer-BioNTech and Moderna vaccine (S_{v1}) at rate (ν_1 *per day*), and vaccinated with the second dose of the Pfizer-BioNTech and Moderna vaccine (S_{v2}) at rate (ν_2 *per day*). Additionally, we assume that individuals in the S_{v0} (S_{v2}) class progress to a temporary class, S_{v4} (S_{v3}) at rate η_0 (η_2) *per day* when their vaccine-derived immunity starts waning. Individuals from the S_{v4} (S_{v3}) class progress to the S_u at rate, η_4 (η_3) *per day*, when their vaccine-derived immunity wanes completely. Break through infections for individuals in the $S_{v0}, S_{v1}, S_{v2}, S_{v3}$, and S_{v4} class are at rate $(1-\epsilon_0)\lambda, (1-\epsilon_1)\lambda, (1-\epsilon_2)\lambda, (1-\epsilon_3)\lambda$, and $(1-\epsilon_4)\lambda$ *per day*, respectively, where λ is as defined in Equation (2.1), and $0 \le \epsilon_j \le 1, j = 0,1,2,3,4$ is the efficacy of the vaccine in preventing humans from being infected. The other variables and parameters are as described for the model (2.2). Here, the total population (N) is given by $N = S_u + S_{v_0} + S_{v_1} + S_{v_2} + S_{v_3} + S_{v_4} + E + E_p + I_a + I_s + I_c + I_h + R$. Schematics of the model are presented in Figure 2 and the full model is described by the system of equations (S.1) in Section 2 of the SI.

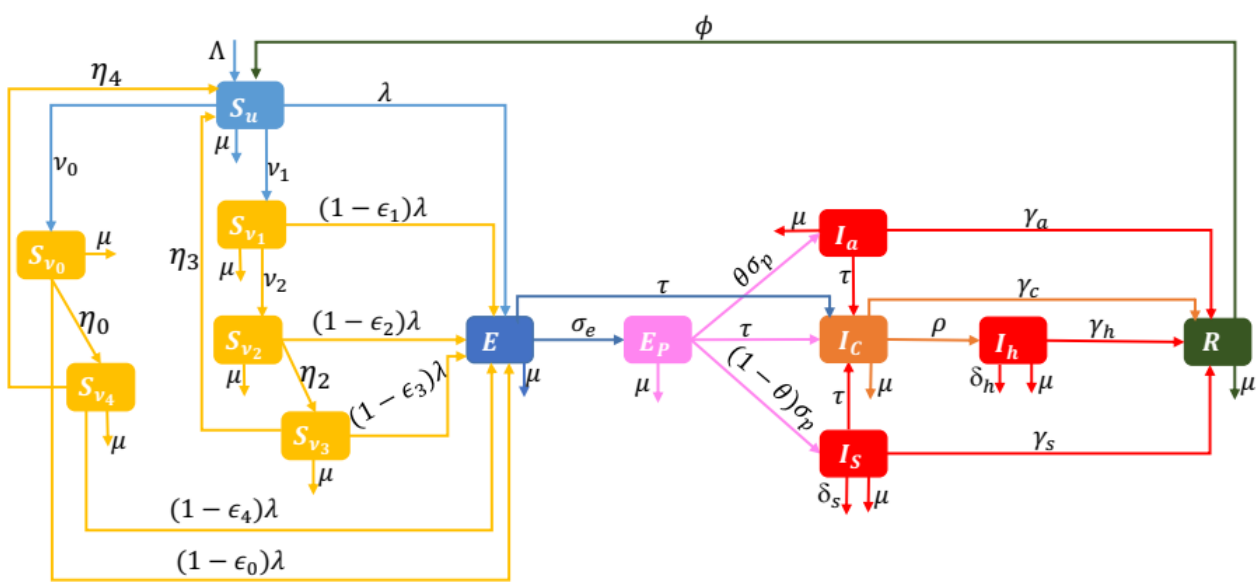

Fig. 2: Schematics of the vaccination model. The model is an extension of the basic model (2.2) to include individuals who are not vaccinated (S_u), vaccinated with the Johnson & Johnson vaccine (S_{v0}) and individuals, S_{v1} (S_{v2}), who have received the first (second) dose of the Pfizer-BioNTech and Moderna vaccines. When vaccine-derived immunity starts waning, individuals in the S_{v0} (S_{v2}) class progress to the S_{v4} (S_{v3}) class. The equations of the vaccination model are listed in Section 2 of the SI.

medRxiv preprint doi: https://doi.org/10.1101/2022.07.06.22277303; this version posted July 7, 2022. The copyright holder for this preprint (which was not certified by peer review) is the author/funder, who has granted medRxiv a license to display the preprint in perpetuity. All rights reserved. No reuse allowed without permission.

2.3. *The vaccination model with a booster dose*

Here, the vaccine model from Section 2.2 (i.e., Equations (S.1) in the SI) is extended to account for a booster vaccine dose for individuals who received the one dose Johnson & Johnson vaccine at least two months earlier, or individuals who received the second dose of the Pfizer-BioNTech or Moderna vaccine at least five months earlier by adding a class of boosted individuals (S_{vb}). Individuals who received the Johnson & Johnson vaccine can receive a Johnson & Johnson, Pfizer-BioNTech, or Moderna booster, while individuals who received the Pfizer-BioNTech (Moderna) vaccine, receive a Pfizer-BioNTech (Moderna) booster. In particular, individuals in the S_{v0} class are boosted at rate ν_{b0} *per day*, while S_{v2}, S_{v3}, and S_{v4} individuals are boosted at rate ν_{b2}, ν_{b3}, and ν_{b4} *per day*, respectively. We assume that when vaccine-derived immunity of boosted individuals wanes, they return to the S_{v3} class at rate, η_b *per day*. Break through infections for boosted individuals are at rate $(1-\epsilon_b)\lambda$, where λ is as defined in Equation (2.1), and $0 \le \epsilon_b \le 1$ is the efficacy of the booster vaccine dose in preventing humans from being infected. The other variables and parameters are as defined in Sections 2.1 and 2.2. Here, the total population (N) is given by $N = S_u + S_{v_0} + S_{v_1} + S_{v_2} + S_{v_3} + S_{v_4} + S_{v_b} + E + E_p + I_a + I_s + I_c + I_h + R$. Schematics of the extended model with a boosted class are presented in Figure 3, while the model equations (S.2) are presented Section 2 of the SI.

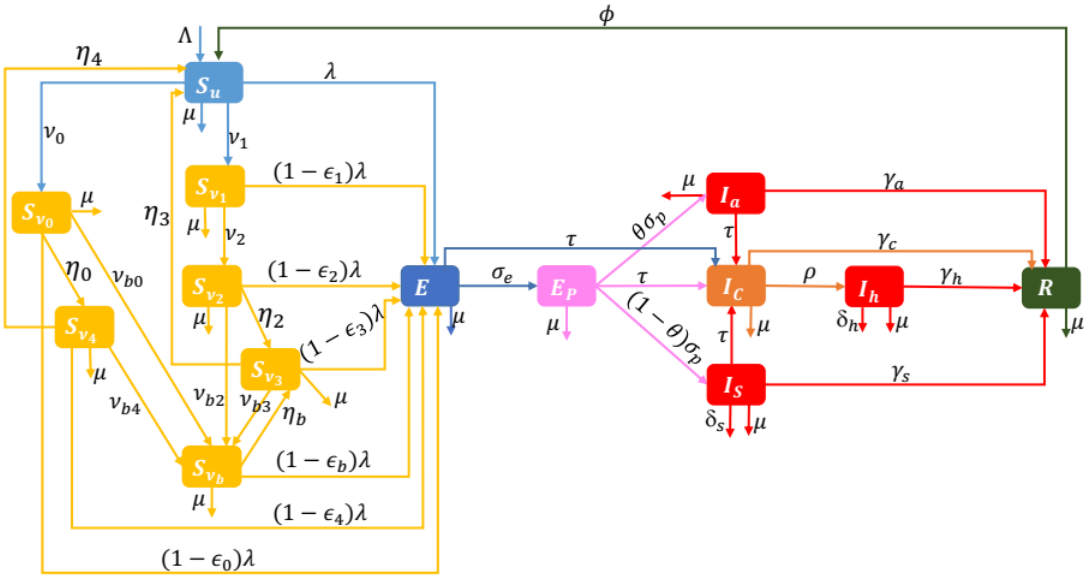

Fig. 3: Schematics of the extended model with a boosted class (S_{v_b}). The other classes are as defined in Section 2.2 and described in Table S1 in the SI. The parameters are described in Table S2 in the SI.

3. Data sources and model calibration

The models (2.2), (S.1), and (S.2) have 39 parameters, 31 of which are available in the literature or can be calculated from COVID-19 information available in the literature (see Table S3 in the SI). Hence, we estimated the remaining 8 parameters by fitting the models to confirmed new daily COVID-19 cases data for the U.S. from January 22, 2020, to May 27, 2022 [33, 35]. It should be mentioned that raw (daily) case data instead of cumulative data is used for the fitting in order to minimize common estimation errors in the calibrated parameter values and their confidence intervals [36]. The model fitting is based on different events and policies implemented during the COVID-19 era. Specifically, the data set is split into ten periods: i) pre-lockdown (January 22 - April 01, 2020), ii) lockdown (April 02 - June 15, 2020), iii) second wave (June 16 - September 27, 2020), iv) Onset of the third wave to the day before the beginning of vaccination (September 28 – December 13, 2020), v) vaccination period during the third wave (December 14, 2020, - February 24, 2021), vi) fourth wave (February 25 - July 05, 2021), vii) pre-booster period during the fifth wave (July 06 - August 12, 2021), viii) the booster period (August 13 - November 27, 2021), ix) the Omicron wave (November 28 - April 01, 2022), and (x) the BA.2.12.1 VOC wave from April 02, 2022. The model (2.2) is fitted to the the data segments from i) to iv), while the model (S.1) is fitted to the segments v) to vii). The model (S.2) is fitted to the two data segments from November 28, 2021 - April 01, 2022, a modified version of the model (S.2) that includes second booster vaccine doses (see (S.4) of SI) is fitted to the data segment from April 02 to May 27, 2022, while the rest of the data (i.e., the segment of the data from May 28 to June 22, 2022) is used for validation. The fitting was performed using a nonlinear least squares technique in MATLAB version R2021a. This entailed identifying the best set of parameters that minimize the sum of

medRxiv preprint doi: https://doi.org/10.1101/2022.07.06.22277303; this version posted July 7, 2022. The copyright holder for this preprint (which was not certified by peer review) is the author/funder, who has granted medRxiv a license to display the preprint in perpetuity. All rights reserved. No reuse allowed without permission.

the squared differences between the confirmed daily cases from the data and our models. Confidence intervals were obtained through a bootstrap method with 5000 bootstrap samples [37]. The estimated parameter values and their confidence intervals are reported in Tables S4-S8 of the SI. Since $V_j = \nu_0 S_u$ ($V_m = \nu_1 S_u$) people receive the Johnson & Johnson vaccine (mRNA vaccines) per day, and we have data for the total number of people vaccinated per day ($V_j + V_m$) [16, 35], the time-dependent rate at which people receive the Johnson & Johnson vaccine (mRNA vaccines) is $\nu_0(t) = \frac{p(V_j(t)+V_m(t)}{S_u(t)}$ $\left(\nu_1(t) = \frac{(1-p)(V_j(t)+V_m(t)}{S_u(t)}\right)$, where p ($1-p$) is the proportion of the U.S. population who receive the Johnson & Johnson vaccine (mRNA vaccines). From [16], 8% (92%) of the vaccinated U.S. population receive the Johnson & Johnson vaccine (mRNA vaccines). That is, $p = 0.08$.

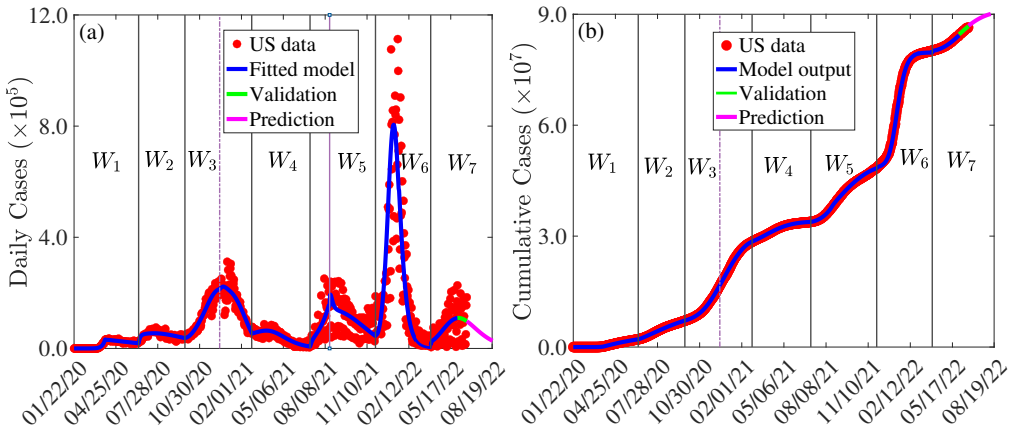

Fig. 4: (a) Fitting of the basic model (2.2) for the period before vaccination (i.e., from January 22 to December 13, 2020), the vaccination model (S.1) for the period from December 14, 2020 to August 12, 2021 and the vaccine model (S.2) with a booster vaccine dose for the period from August 13, 2021 to May 27, 2022, using daily case data for the U.S. Validation of the vaccination model with booster dose (S.2) for the period from May 28 to June 22, 2022 is depicted by the green curve. (b) Illustration of the cumulative number of cases from the models (2.2)-(S.2) using the fixed parameters in Table S3 (see SI) and the estimated parameters in Tables S4 - S8 (see SI) on the same graph with cumulative case data from the U.S. for the period from January 22, 2020 to June 22, 2022. Black vertical lines delineate the end of various waves or events that resulted in a surge in disease cases, dashed magenta lines denotes the start of vaccination, while solid magenta lines denote the start of booster vaccine doses.

Figure 4(a) illustrates the model fit (blue curve) and validation (green curve), while Figure 4(b) illustrates the output of the model using the fixed and estimated parameter values in Tables S3 and S4-S8, respectively. The model performs well in matching the remaining available data. The fitting reveals that the transmission rate was highest during the pre-lockdown period (January 22 - April 01, 2020) than any other period in the U.S. This high transmission rate can be explained by the lack of or poor adherence to non-pharmaceutical Interventions (NPIs) or the ineffectiveness of these measures. The control reproduction number during this period was $\mathscr{R}_{c1} \approx 2.78$ with confidence interval $(2.77, 4.19)$. The lock-down that was implemented after this period was critical in reducing the burden of the pandemic, and hence the control reproduction number significantly. Specifically, the control reproduction number during the lockdown period (April 02 - June 15, 2020) was $\mathscr{R}_{c1} \approx 0.964$ with confidence interval $(0.963, 0.991)$. Hence, the $\mathscr{R}_{c1}$ for the lock-down period was $\approx 65\%$ less than that for the pre-lockdown period. Since $\mathscr{R}_{c1}$ was less than one during the lockdown period, there were hopes that the disease will die out in the population. However, relaxation of lockdown and control measures, as well as events such as the July 4, 2021 celebration, caused a surge in the number of cases which resulted in another wave of the pandemic [38]. This wave was driven primarily by pre-symptomatic and asymptomatic infectious individuals [38, 39, 49, 50], and the control reproduction number was $\approx 30\%$ more than that for the lockdown period. Inconsistent use of NPIs during the post lockdown period and mass testing, which resulted in an average positivity rate of 1.4% [35, 40] contributed to the surge that resulted in the big pandemic wave from late September 2020 to late February 2021. The reproduction number for this wave was $\mathscr{R}_{c1} = 1.9$ with confidence interval $(1.83, 2.17)$ before the start of vaccination and $\mathscr{R}_{c2} = 0.74$ with confidence interval $(0.70, 0.76)$ during the initial vaccination period (from September 28 to December 13, 2020). Authorization of highly effective vaccines against COVID-19 was timely to curtail the burden of this wave. During the intensive vaccination period, the pre-symptomatic and symptomatic transmission rates were reduced significantly compared to their values for the previous periods. However, the transmission rate for asymptomatic individuals increased significantly. This can be explained by the fact that the COVID-19 vaccines approved for use in the U.S. were highly effective in preventing severe disease and symptomatic infections [14, 17, 20]. The estimated control

medRxiv preprint doi: https://doi.org/10.1101/2022.07.06.22277303; this version posted July 7, 2022. The copyright holder for this preprint (which was not certified by peer review) is the author/funder, who has granted medRxiv a license to display the preprint in perpetuity. All rights reserved. No reuse allowed without permission.

reproduction number for this period was as low as 0.73 with confidence interval $(0.10, 1.05)$. Despite the availability of these highly effective vaccines, another surge in the number of cases, which resulted in a 67% increase in the reproduction number from the previous period was witnessed from July 06 to August 13, 2021. This surge was attributed to factors such as vaccine hesitancy [41], warning natural and vaccine-derived immunity [42–44], non-compliance with NPIs [38], and emergence of a variant of concern (VOC)–the Delta variant, which was more transmissible than the wild-type virus [45]. The next surge from late November 2021 was attributed to the Omicron variant, which was about three times more transmissible than any other variant, although it resulted mostly in milder cases, fewer hospitalizations and deaths [46, 47]. This is confirmed by our parameter estimation. In particular, our parameter estimation showed that the transmission rate of the Omicron variant was ≈ 3 times the transmission rate of the Delta variant, which is consistent with [85–87] and that the transmission rate of asymptomatic and pre-symptomatic individuals is about four times higher than that of symptomatic and hospitalized individuals, which is in line with [48–50]. The estimated reproduction number for this period is $\mathscr{R}_{c3} = 1.3$ with confidence interval $(0.3, 1.9)$. Finally, the reproduction number for the wave that occurred after the major Omicron wave is $\mathscr{R}_{c4} = 0.9$ with confidence interval $(0.5, 1.3)$.

4. Results

4.1. Analytical results

In this section, we compute the control reproduction number and disease-free equilibrium of each of the models (2.2), (S.1), and (S.2), and establish the stability of the disease-free equilibrium. Also, we compute the endemic equilibrium of the basic model (2.2) explicitly and show that under specific parameter regimes, the disease-free equilibrium of each of the models can be globally asymptotically stable, while under certain parameter regimes, a sub-critical (backward) bifurcation occurs for the models (S.1) and (S.2).

4.1.1. Disease-free equilibrium and reproduction number

The disease-free equilibrium of the model (2.2) (obtained by setting the left hand sides of the equations and the disease terms to zero) is given by

$$\mathscr{D}_0 : (S^*, E^*, E_p^*, I_a^*, I_s^*, I_c^*, I_h^*, R^*) = \left(\frac{\Lambda}{\mu}, 0, 0, 0, 0, 0, 0, 0\right).$$

The next generation operator method [71, 77] can be used to establish the asymptotic stability of the disease-free equilibrium ($\mathscr{D}_0$) and to compute the reproduction number of the model. In particular, using the notation in [71], it follows that the associated next-generation matrices, F_1 (for new infection) and V_1 (for transitions), are given by

$$F_1 = \begin{pmatrix} 0 & \frac{\beta_p S^*}{N^*} & \frac{\beta_a S^*}{N^*} & \frac{\beta_s S^*}{N^*} & \frac{\beta_c S^*}{N^*} & \frac{\beta_h S^*}{N^*} \\ 0 & 0 & 0 & 0 & 0 & 0 \\ 0 & 0 & 0 & 0 & 0 & 0 \\ 0 & 0 & 0 & 0 & 0 & 0 \\ 0 & 0 & 0 & 0 & 0 & 0 \\ 0 & 0 & 0 & 0 & 0 & 0 \end{pmatrix}, \text{ and } V_1 = \begin{pmatrix} K_1 & 0 & 0 & 0 & 0 & 0 \\ -\sigma_e & K_2 & 0 & 0 & 0 & 0 \\ 0 & -\theta\sigma_p & K_3 & 0 & 0 & 0 \\ 0 & -(1-\theta)\sigma_p & 0 & K_4 & 0 & 0 \\ -\tau & -\tau & -\tau & -\tau & K_5 & 0 \\ 0 & 0 & 0 & 0 & -\rho & K_6 \end{pmatrix},$$

where, $K_1 = \tau + \sigma_e + \mu$, $K_2 = \tau + \sigma_p + \mu$, $K_3 = \tau + \gamma_a + \mu$, $K_4 = \tau + \gamma_s + \delta_s + \mu$, $K_5 = \rho + \gamma_c + \mu$, $K_6 = \gamma_h + \delta_h + \mu$.
It is convenient to define the quantity $\mathscr{R}_{c1}$ by:

$$\begin{aligned} \mathscr{R}_{c1} = \rho(F_1 V^{-1}) = & \frac{\beta_p \sigma_e S_u^*}{N^* K_1 K_2} + \frac{\beta_a \sigma_e \sigma_p \theta S_u^*}{N^* K_1 K_2 K_3} + \frac{\beta_s \sigma_e \sigma_p (1-\theta) S_u^*}{N^* K_1 K_2 K_4} + \frac{\tau \beta_c S_u^* [\sigma_e \sigma_p (\theta K_4 + K_3(1-\theta)) + K_3 K_4 (K_2 + \sigma_e)]}{N^* K_1 K_2 K_3 K_4 K_5} \\ & + \frac{\rho \tau \beta_h S_u^* [\sigma_e \sigma_p (\theta K_4 + K_3(1-\theta)) + K_3 K_4 (K_2 + \sigma_e)]}{N^* K_1 K_2 K_3 K_4 K_5 K_6} \end{aligned} \tag{4.1}$$

The quantity $\mathscr{R}_{c1}$, is the *control reproduction number* of the model (2.2). It measures the average number of new COVID-19 cases generated by a typical infectious individual introduced into a population where a certain fraction is protected through out the period within which the individual is infectious. It is the spectral radius of the next generation matrix FV^{-1}. Observe that $\mathscr{R}_{c1}$ is the sum of the reproduction numbers connected with disease transmission by pre-symptomatic infectious, asymptomatic infectious, symptomatic infectious, confirmed, and hospitalized individuals. From theorem 2 in [71], we have the following result:

Theorem 4.1. *The disease-free equilibrium (DFE) of the model* (2.2) *is locally-asymptotically stable if* $\mathscr{R}_{c1} < 1$ *and unstable if* $\mathscr{R}_{c1} > 1$.

medRxiv preprint doi: https://doi.org/10.1101/2022.07.06.22277303; this version posted July 7, 2022. The copyright holder for this preprint (which was not certified by peer review) is the author/funder, who has granted medRxiv a license to display the preprint in perpetuity. All rights reserved. No reuse allowed without permission.

Theorem 4.1 can be interpreted, epidemiologically, to mean that a small influx of COVID-19 cases will not generate a COVID-19 outbreak if the control reproduction number ($\mathscr{R}_{c1}$) is less than unity.

The endemic equilibrium of the basic model (2.2) are obtained by setting the LHS of te system to zero. Solving for each of the equations in terms of the equilibrium value (λ^*) of the force of infection (λ) leads to

$$\begin{aligned}
S^* &= \frac{\Lambda B_0}{\mu B_0 + B_7\lambda^*}, \quad E^* = \frac{\Lambda K_2K_3K_4K_5K_6K_7\lambda^*}{\mu B_0 + B_7\lambda^*}, \quad E_p^* = \frac{\Lambda\sigma_e K_2K_3K_4K_5K_6K_7\lambda^*}{\mu B_0 + B_7\lambda^*}, I_a^* = \frac{\Lambda\theta\sigma_e\sigma_p K_4K_5K_6K_7\lambda^*}{\mu B_0 + B_7\lambda^*}, \\
I_s^* &= \frac{\Lambda(1-\theta)\sigma_e\sigma_p K_4K_5K_6K_7\lambda^*}{\mu B_0 + B_7\lambda^*}, \quad I_c^* = \frac{\Lambda\tau K_6K_7(B_2+B_3)\lambda^*}{\mu B_0 + B_7\lambda^*}, \quad I_h^* = \frac{\Lambda\rho\tau K_7(B_2+B_3)\lambda^*}{\mu B_0 + B_7\lambda^*}, \quad R^* = \frac{\Lambda B_5\lambda^*}{\mu B_0 + B_7\lambda^*}, \\
N^* &= \frac{\Lambda\left\{B_0 + \left[K_7(B_2+B_3)(K_5K_6+\tau B_6) + B_5\right]\lambda^*\right\}}{\mu B_0 + B_7\lambda^*}, \quad \text{where}
\end{aligned}$$

$$\begin{aligned}
B_0 &= K_1K_2K_3K_4K_5K_6K_7, \; B_1 = \gamma_c K_6 + \gamma_h\rho, \; B_2 = \sigma_e\sigma_p[(1-\theta)K_3 + \theta K_4], \; B_3 = K_3K_4(\sigma_e + K_2), \\
B_4 &= \sigma_e\sigma_p K_5K_6[(1-\theta)\gamma_s K_3 + \theta\gamma_a K_4], \; B_5 = \tau B_1(B_2+B_3) + B_4, \; B_6 = (\rho + K_6), \; B_7 = B_0 - \phi B_5.
\end{aligned}$$

It can be verified that $B_7 = B_0 - \phi B_5 > 0$ (see Section 5 of the SI). Substituting $E_p^*, I_a^*, I_s^*, I_c^*, I_h^*$ in the equilibrium expression for λ^* and simplifying leads to the algebraic equation

$$\left\{\left[K_7\big(B_2+B_3\big)\big(K_5K_6+\tau B_6\big) + B_5\right]\lambda^* - B_0\big(\mathscr{R}_{c1} - 1\big)\right\}\lambda^* = 0, \tag{4.2}$$

whose solutions are

$$\lambda^* = 0, \quad \text{or} \quad \lambda^* = \frac{B_0\big(\mathscr{R}_{c1} - 1\big)}{K_7\big(B_2+B_3\big)\big(K_5K_6+\tau B_6\big) + B_5} > 0 \;\text{ if }\; \mathscr{R}_{c1} > 1. \tag{4.3}$$

This leads to the following result:

Theorem 4.2. *The basic model* (2.2) *has a unique endemic equilibrium if* $\mathscr{R}_{c1} > 1$ *and no endemic equilibrium otherwise.*

The same approach can be used to compute the disease-free equilibrium and the reproduction number of the vaccination model (S.1) (See Section 2 of the supplementary information for details). Specifically, the disease-free equilibrium of the vaccination model (S.1) is $(S_u^{**}, S_{v_0}^{**}, S_{v_1}^{**}, S_{v_2}^{**}, S_{v_3}^{**}, S_{v_4}^{**}, E^{**}, E_p^{**}, I_a^{**}, I_s^{**}, I_c^{**}, I_h^{**}, R^{**})$, where

$$S_{v0}^{**} = \frac{\nu_0}{K_2}S_u^{**}, \quad S_{v1}^{**} = \frac{\nu_1}{K_3}S_u^{**}, \quad S_{v2}^{**} = \frac{\nu_1\nu_2}{K_3K_4}S_u^{**}, \quad S_{v3}^{**} = \frac{\eta_2\nu_1\nu_2}{K_3K_4K_5}S_u^{**}, \quad S_{v4}^{**} = \frac{\eta_0\nu_0}{K_2K_6}S_u^{**}, \tag{4.4}$$

and

$$S_u^{**} = \frac{\Lambda\prod_{i=2}^{6}K_i}{\prod_{i=1}^{6}K_i - \left(\eta_0\eta_4\nu_0\prod_{i=3}^{5}K_i + \eta_2\eta_3\nu_1\nu_2K_2K_6\right)}. \tag{4.5}$$

The K_i's, $i = 1,2,3,4,5,6$ are given by $K_1 = \nu_0 + \nu_1 + \mu, K_2 = \eta_0 + \mu, K_3 = \nu_2 + \mu, K_4 = \eta_2 + \mu, K_5 = \eta_3 + \mu, K_6 = \eta_4 + \mu$. It can easily be verified that the denominator of S_u^{**} is positive, i.e., $\prod_{i=1}^{6}K_i - \left(\eta_0\eta_4\nu_0\prod_{i=3}^{5}K_i + \eta_2\eta_3\nu_1\nu_2K_2K_6\right) > 0$ (since the two negative terms are both contained in the product of the K_i's). Using the next generation operator method (See Section 2 of the SI for details), we obtain the control reproduction number

$$\begin{aligned}
\mathscr{R}_{c2} = \rho(F_2V^{-1}) &= \frac{\beta_p\sigma_eB^{**}}{N^{**}K_1K_2} + \frac{\beta_a\sigma_e\sigma_p\theta B^{**}}{N^{**}K_1K_2K_3} + \frac{\beta_s\sigma_e\sigma_p(1-\theta)B^{**}}{N^{**}K_1K_2K_4} + \frac{\tau\beta_cB^{**}[\sigma_e\sigma_p(\theta K_4 + K_3(1-\theta)) + K_3K_4(K_2+\sigma_e)]}{N^{**}K_1K_2K_3K_4K_5} \\
&+ \frac{\rho\tau\beta_hB^{**}[\sigma_e\sigma_p(\theta K_4 + K_3(1-\theta)) + K_3K_4(K_2+\sigma_e)]}{N^{**}K_1K_2K_3K_4K_5K_6},
\end{aligned} \tag{4.6}$$

where $B^{**} = S_u^{**} + (1-\epsilon_0)S_{v_0}^{**} + (1-\epsilon_1)S_{v_1}^{**} + (1-\epsilon_2)S_{v_2}^{**} + (1-\epsilon_3)S_{v_3}^{**} + (1-\epsilon_4)S_{v_4}^{**}$.

Furthermore, the disease-free equilibrium of the vaccination model with a booster dose (S.2) presented in Section 2 of the SI is $\mathscr{E}_3 = \{(S_u^{***}, S_{v_0}^{***}, S_{v_1}^{***}, S_{v_2}^{***}, S_{v_3}^{***}, S_{v_4}^{***}, S_{v_b}^{***}, E^{***}, E_p^{***}, I_a^{***}, I_s^{***}, I_c^{***}, I_h^{***}, R^{***})\}$, where

$$S_{v0}^{***} = \frac{\nu_0}{K_7}S_u^{***}, \quad S_{v1}^{***} = \frac{\nu_1}{K_3}S_u^{***}, \quad S_{v2}^{***} = \frac{\nu_1\nu_2}{K_3K_8}S_u^{***},$$

medRxiv preprint doi: https://doi.org/10.1101/2022.07.06.22277303; this version posted July 7, 2022. The copyright holder for this preprint (which was not certified by peer review) is the author/funder, who has granted medRxiv a license to display the preprint in perpetuity. All rights reserved. No reuse allowed without permission.

$$S_{v3}^{***} = \frac{\eta_2\nu_1\nu_2 A_7 K_{10}(K_9K_{11}-\nu_{b_3}\eta_b)+\eta_b(\nu_0\nu_{b_0}K_3K_8K_9K_{10}+\nu_1\nu_2\nu_{b_2}K_7K_9K_{10}+\eta_2\nu_1\nu_2\nu_{b_3}K_7K_{10}+\eta_0\nu_0\nu_{b_4}K_3K_8K_9)}{K_3K_7K_8K_9K_{10}(K_9K_{11}-\nu_{b_3}\eta_b)}S_u^{***},$$

$$S_{v4}^{***} = \frac{\eta_0\nu_0}{K_7K_{10}}S_u^{***}, \quad S_{vb}^{***} = \frac{\nu_0\nu_{b_0}K_3K_8K_9K_{10}+\nu_1\nu_2\nu_{b_2}K_7K_9K_{10}+\eta_2\nu_1\nu_2\nu_{b_3}K_7K_{10}+\eta_0\nu_0\nu_{b_4}K_3K_8K_9}{K_3K_7K_8K_{10}(K_9K_{11}-\nu_{b_3}\eta_b)}S_u^{***},$$

and

$$S_u^{***} = \frac{\Lambda K_3\prod_{i=7}^{10}K_i(K_9K_{11}-\nu_{b_3}\eta_b)}{K_1K_3\prod_{i=7}^{10}K_i - Q - \eta_4\eta_b(\nu_0\nu_{b_0}K_3\prod_{i=8}^{10}K_i+\nu_1\nu_2\nu_{b_2}K_7\prod_{i=9}^{10}K_i+\eta_2\nu_1\nu_2\nu_{b_3}K_7K_{10}+\eta_0\nu_0\nu_{b_4}K_3\prod_{i=8}^{9}K_i)}, \tag{4.7}$$

$$Q = \eta_4(K_9K_{11}-\nu_{b_3}\eta_b)(\eta_0\nu_0K_3K_8K_9+\eta_2\nu_1\nu_2K_7K_{10})$$

The $K_i's, i = 7,8,9,10,11$ are given by $K_7 = \eta_0+\nu_{b0}+\mu, K_8 = \eta_2+\nu_{b3}\mu, K_9 = \eta_3+\nu_{b3}+\mu, K_{10} = \eta_4+\nu_{b4}+\mu, K_{11} = \eta_b+\mu$ and $(K_9K_{11}-\nu_{b_3}\eta_b) > 0$. It can easily be verified that the denominator of S_u^{***} is positive, i.e., $K_1K_3\prod_{i=7}^{10}K_i - Q - \eta_4\eta_b(\nu_0\nu_{b_0}K_3\prod_{i=8}^{10}K_i+\nu_1\nu_2\nu_{b_2}K_7\prod_{i=9}^{10}K_i+\eta_2\nu_1\nu_2\nu_{b_3}K_7K_{10}+\eta_0\nu_0\nu_{b_4}K_3\prod_{i=8}^{9}K_i) > 0$.
Using the next generation method (see Section 2 of the SI for details), we obtain the control reproduction number

$$\begin{aligned}\mathscr{R}_{c3} = &\frac{\beta_p\sigma_e\Phi^{***}}{N^{***}K_1K_2}+\frac{\beta_a\sigma_e\sigma_p\theta\Phi^{***}}{N^{***}K_1K_2K_3}+\frac{\beta_s\sigma_e\sigma_p(1-\theta)\Phi^{***}}{N^{***}K_1K_2K_4}+\frac{\tau\beta_c\Phi^{***}[\sigma_e\sigma_p(\theta K_4+K_3(1-\theta))+K_3K_4(K_2+\sigma_e)]}{N^{***}K_1K_2K_3K_4K_5}\\ &+\frac{\rho\tau\beta_h\Phi^{***}[\sigma_e\sigma_p(\theta K_4+K_3(1-\theta))+K_3K_4(K_2+\sigma_e)]}{N^{***}K_1K_2K_3K_4K_5K_6},\end{aligned} \tag{4.8}$$

where $\Phi^{***} = S_u^{***}+(1-\epsilon_0)S_{v_0}^{***}+(1-\epsilon_1)S_{v_1}^{***}+(1-\epsilon_2)S_{v_2}^{***}+(1-\epsilon_3)S_{v_3}^{***}+(1-\epsilon_4)S_{v_4}^{***}+(1-\epsilon_b)S_{v_b}^{***}$.

4.1.2. Backward bifurcation and global stability analysis

The phenomenon of backward bifurcation, which has been observed in numerous disease transmission models (see, for example, [72–74]), is characterized by the coexistence of a stable disease-free equilibrium and a stable endemic equilibrium when the reproduction number of the model is less than unity. The public health implication of the backward bifurcation phenomenon in the model (S.2) is that the classical epidemiological requirement of having the reproduction number ($\mathscr{R}_{c3}$) less than unity for disease control, although necessary, is no longer sufficient for the effective control of the disease. Here, we state a backward bifurcation result for the model (S.2) and present the proof in Section 4 of the supplementary material. Similar results for the model (S.1) can be obtained by setting any additional terms found in the model (S.2) but not in the model (S.1) to zero.

Theorem 4.3. *Model (S.2) exhibits a backward bifurcation at $\mathscr{R}_{c3} = 1$.*

For the special case of the model in which $\epsilon_0 = 1$, $\phi = 0$, $\eta_3 = \eta_4$, and $\nu_0 = \nu_1 = \nu_2 = \nu_{b0} = \nu_{b1} = \nu_{b2} = \nu_{b3} = \nu_{b4} = \eta_b$, we have the following result, whose proof is found in Section 4 of the SI.

Theorem 4.4. *The disease-free equilibria ($\mathscr{E}_3$) of the model (S.2) with $\epsilon_0 = 1, \phi = 0, \eta_3 = \eta_4$, and $\nu_0 = \nu_1 = \nu_2 = \nu_{b0} = \nu_{b1} = \nu_{b2} = \nu_{b3} = \nu_{b4} = \eta_b$ is globally-asymptotically stable in Ω whenever $\mathscr{R}_{c3} \le 1$.*

4.2. Numerical simulation results

In this section, the basic model (2.2), the vaccination model (S.1), and the vaccination model with a booster dose (S.2) are simulated using the fixed and estimated parameters in Tables S3-S8 to assess the impact of the Johnson & Johnson and mRNA vaccines, booster doses, and timing of these measures on the burden of the COVID-19 pandemic in the U.S.

4.2.1. Assessing the impact of each type of vaccine

To investigate the impact of the single-dose Johnson & Johnson or any of the two-dose mRNA vaccines, Model (S.1) in SI is simulated using the parameters in Tables S3 and S5 in SI. The results of the simulation presented in Figure 5 show that in the absence of vaccines, a 27% increase from the baseline value of the cumulative number of COVID-19 cases in the U.S. would have been recorded by August 24, 2021 (comparing the blue and red curves in Figure 5 (b)). If only the Johnson & Johnson vaccine was administered from the start of vaccination in the U.S., a 3.3% increase in the number of cumulative cases would have been recorded by August 24, 2021 (comparing the blue and magenta curves in Figure 5 (b)). A vaccine program that prioritized only mRNA vaccines from the start of vaccination in the U.S. would have resulted in a minor reduction (0.23%) in the reported number of cumulative cases by August 24, 2021 (comparing the blue and green curves in Figure 5 (b)), and a 24% reduction in comparison to the worst case scenario with no vaccination (comparing the red and green curves in Figure 5 (b)). This is due to the fact that for the baseline case, 92% of the vaccinated population

medRxiv preprint doi: https://doi.org/10.1101/2022.07.06.22277303; this version posted July 7, 2022. The copyright holder for this preprint (which was not certified by peer review) is the author/funder, who has granted medRxiv a license to display the preprint in perpetuity. All rights reserved. No reuse allowed without permission.

received one of the mRNA vaccines [16]. Similar reductions are obtained for the new daily cases (Figure 5 (a)). It should be mentioned that using the Johnson & Johnson vaccine (mRNA vaccines) resulted in a 1.7% (17.4%) reduction in the control reproduction number ($\mathscr{R}_{c2}$).

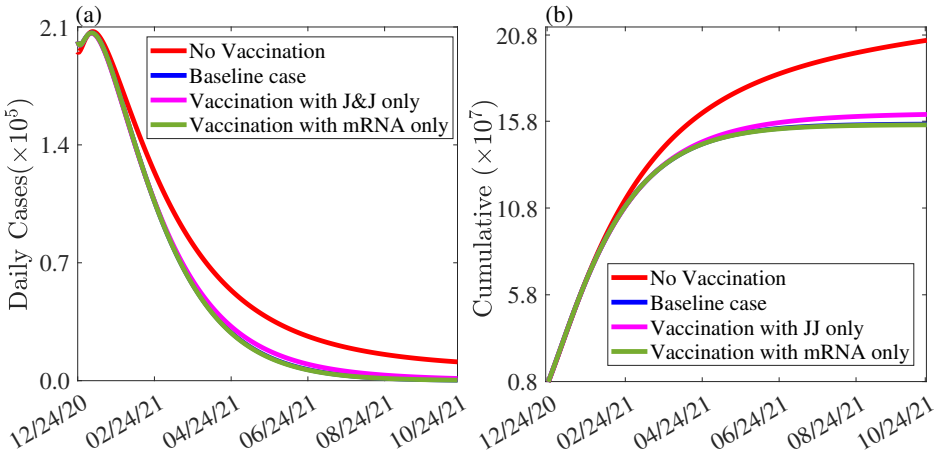

Fig. 5: Impact of the Johnson & Johnson (J & J) and Pfizer-BioNTech or Moderna (mRNA) vaccines on the (a) new daily and (b) cumulative cases during the first 300 days of vaccination in the U.S. The model (S.1) was simulated using the parameter values presented in Tables S3-S5 in SI.

4.2.2. Assessing the impact of mass vaccination and booster shots

The models (S.1) and (S.2) are simulated to assess the impact of mass vaccination and boosting of fully vaccinated individuals on the trajectory of the COVID-19 pandemic in the U.S. Here, it is assumed that vaccination in the U.S. started on December 14, 2020, the effect of vaccines on the number of new cases started 10 days later (i.e., on December 24, 2020), and that boosting of fully vaccinated individuals started on August 18, 2021. The results obtained (Figure 6) show that for the worst case scenario in which there is no vaccination and all parameters are held at their baseline values given in Tables S3-S7, it will be impossible to reduce the number of new daily cases below one (red curve in Figure 6 (a)). Hence, the disease will become endemic (i.e., establish itself in the community). If the number of people vaccinated per day is low, e.g., if only 150,000 people were vaccinated daily (with 92% of them receiving mRNA vaccines and 8% the Johnson & Johnson vaccine [16]), elimination of the disease will be possible by early February 2023 (magenta curve in Figure 6 (a)). However, if 2,000,000 people were vaccinated daily (in the same ratio) from the start of vaccination, elimination would have been possible by June 07, 2021 (green curve in Figure 6 (a)).

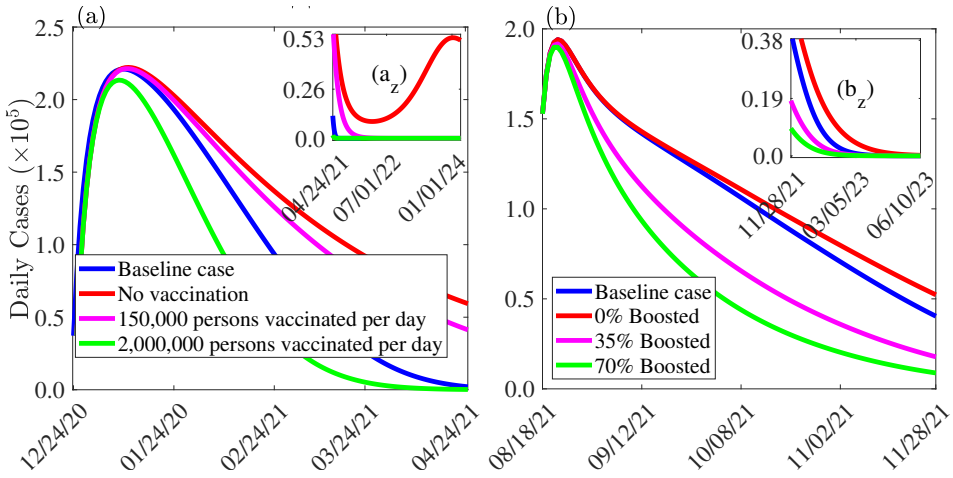

Fig. 6: Simulations of the models (S.1) and (S.2) depicting the impact of (a) mass vaccination, and (b) booster shot administration on the new daily COVID19 cases in the U.S. as a function of time for different (a) vaccination, and (b) booster rates. The other parameters used for the simulations are given in Tables S3-S7 in the SI. (a_z) and (b_z) are zoomed in versions of portions of (a) and (b), respectively.

medRxiv preprint doi: https://doi.org/10.1101/2022.07.06.22277303; this version posted July 7, 2022. The copyright holder for this preprint (which was not certified by peer review) is the author/funder, who has granted medRxiv a license to display the preprint in perpetuity. All rights reserved. No reuse allowed without permission.

Furthermore, the simulations show that if the rate at which individuals who have received the Johnson & Johnson vaccine or two doses of any of the mRNA vaccines are boosted is held at its baseline value, then it would have taken until June 23, 2022 to eliminate the disease (blue curve in Figure 6 (b)) and until October 11, 2022 in the absence of boosting (red curve in Figure 6 (b)). On the other hand, if at the beginning of booster administration, 35% of those eligible for boosting were boosted using any of the mRNA vaccines, it would have taken until June 05, 2022 to eliminate the disease (magenta curve in Figure 6 (b)), while if 70% of those eligible for boosting received boosted doses of the mRNA vaccines, it would have taken until May 22, 2022 to eliminate the disease (green curve in Figure 6 (b)).

4.2.3. Assessing the impact of vaccination and booster timing

The models (S.1) and (S.2) are simulated to assess the impact of timing of vaccination and booster doses on the burden of COVID-19 in the U.S. (quantified in terms of the daily cases). The results obtained (see Figure 7) show that if vaccination in the U.S. started one month earlier instead of on December 14, 2020 [34], the third wave of the pandemic would have peaked three weeks earlier (compared to the baseline case) and elimination would have been possible by May 20, 2021 (purple curve in Figure 7 (a)). The reduction in the time for the pandemic to peak and the time to elimination would have been even more significant if vaccination started earlier. In particular, if vaccination started two and a half months earlier, the third wave of the pandemic would have peaked by October 14, 2020 and elimination would have been possible by April 02, 2021 (green curve in Figure 7 (a)). If administration of booster vaccine doses started one month earlier than the actual August 18, 2021 [35] start date, the fifth wave (July 04 to November 27, 2021) of the pandemic would have peaked 10 days earlier (compared to the base scenario of August 22, 2021) and the peak number of cases would have been 9% less than the baseline peak number of cases (comparing the blue and magenta curves in Figure 7 (b)), while if administration of booster vaccine doses started one and a half month earlier, the pandemic would have peaked one month earlier and the peak number of cases would have been 11% less than the baseline peak number of cases (comparing the blue and green curves in Figure 7 (b)). Thus, early implementation of booster doses would have resulted in a significant reduction in the peak number of daily cases and the time to elimination. For example, if boosting started 1.5 months earlier, elimination would have been possible by June 10, 2022 (green curve in Figure 7 (b)).

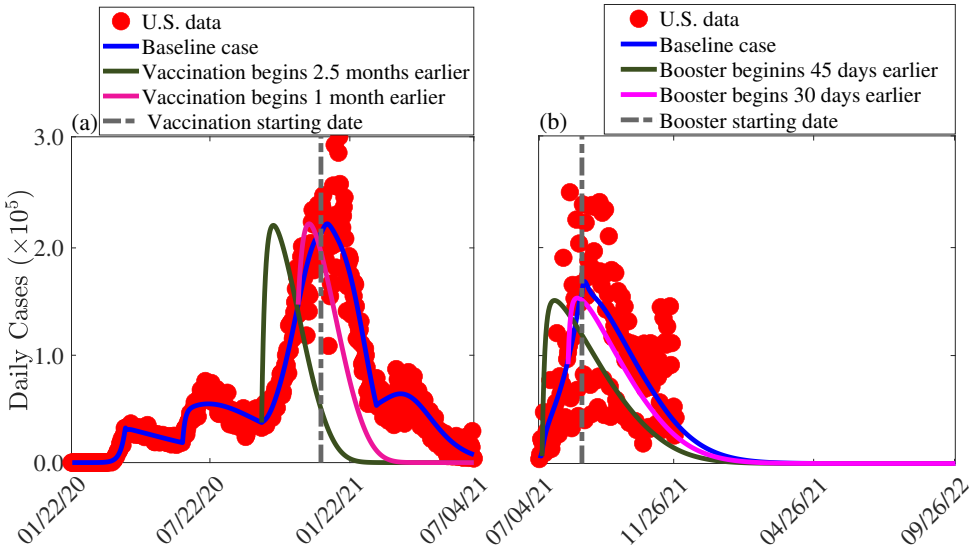

Fig. 7: Simulations of the model (a) (2.2) and (S.1) showing the impact of vaccination timing and (b) the model (S.2) depicting the impact of booster vaccine dose timing on the number of daily cases of COVID-19 in the U.S. The parameters used for the simulations are presented in Tables S3-S5-S7 in SI.

4.2.4. Assessing the impact of the boosting rate and type of vaccine used for boosting

Here, the model (S.2) is simulated to assess the impact of the boosting rate on the daily COVID-19 cases in the U.S. and the impact of boosting only with the Johnson & Johnson vaccine (i.e., everybody is boosted with the Johnson & Johnson vaccine, irrespective of whether they were fully vaccinated with the Johnson & Johnson or an mRNA vaccine), the mRNA vaccines (i.e., everybody is boosted with an mRNA vaccine irrespective of whether they were fully vaccinated with the Johnson & Johnson or an mRNA vaccine), or boosting with both the Johnson & Johnson and the mRNA vaccines (i.e., individuals who received the Johnson & Johnson vaccine, are boosted with the Johnson & Johnson vaccine, while individuals who receive two doses of the mRNA vaccines are boosted with an mRNA vaccine) on the number of daily

medRxiv preprint doi: https://doi.org/10.1101/2022.07.06.22277303; this version posted July 7, 2022. The copyright holder for this preprint (which was not certified by peer review) is the author/funder, who has granted medRxiv a license to display the preprint in perpetuity. All rights reserved. No reuse allowed without permission.

and cumulative cases of COVID-19 in the U.S. The results obtained (see Figure 8) show that in a hypothetical situation in which boosting was halted just before the emergence of the Omicron variant in the U.S. (i.e., by November 28, 2021), a 3% increase in the the peak size of the Omicron wave would have been recorded (comparing the blue and magenta curves in Figure 8 (a)). However, if the boosting rate was accelerated, e.g., if the boosting rate was four times its baseline value, it would have been possible to reduce the size of the peak of the Omicron variant by $\approx 3.4\%$, and the time to elimination would have been August 13, 2022, i.e., a reduction of one month from the baseline case (comparing the blue and green curves in Figure 8 (a)). Furthermore, our simulations show that in the absence of boosting, 49,363,700 cumulative cases will be recorded in the U.S. by July 26, 2022 (magenta curve in Figure 8 (b)). Boosting only with the Johnson & Johnson vaccine from late November 2021 would have resulted in a 0.4% decrease in the cumulative number of cases by July 26, 2022 (comparing the magenta and cyan curves in Figure 8 (b)), while boosting with a combination of the Johnson & Johnson vaccine and any of the mRNA vaccines would have resulted in a 0.6% decrease in the number of cumulative cases from the worst case scenario by July 26, 2022 (comparing the magenta and green curves in Figure 8 (b)). For the baseline case in which only the two mRNA vaccines have been used for boosting from the onset of booster administration, 49,035,900 cumulative cases will be recorded by July 26, 2022 assuming no new variant emerged (blue curve in Figure 8 (b)). This represents a 0.7% reduction from the worst case scenario (comparing the magenta and blue curves in Figure 8 (b)). Hence, boosting with only the mRNA vaccines is more beneficial in controlling the pandemic.

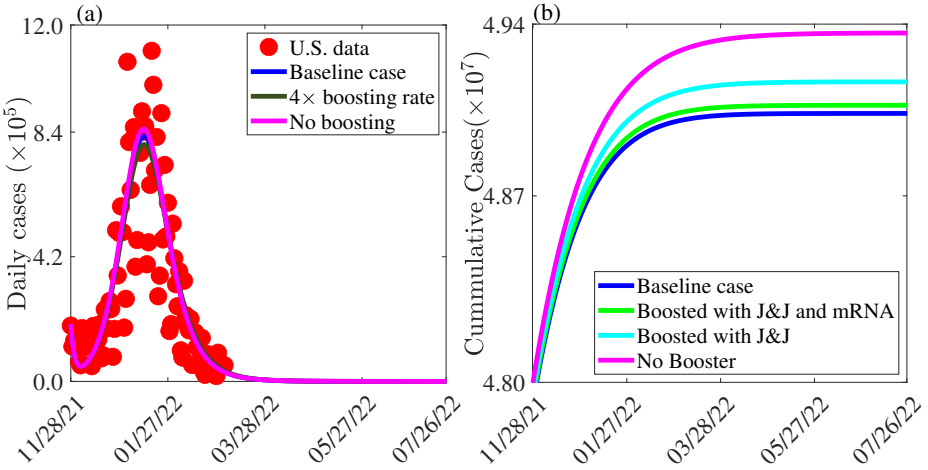

Fig. 8: Simulations of the model (S.2) in SI to assess the impact of the (a) boosting rate on the number of new daily COVID-19 cases and (b) the type of vaccine –Johnson & Johnson (J & J vaccine), Pfizer-BioNTech or Moderna (mRNA vaccines), or both J & J and mRNA vaccines used for boosting on the number of cumulative COVID-19 cases in the U.S. The parameter values used for the simulations are presented in Tables S3-S7 in SI.

4.2.5. Assessing the impact of the second booster shot on the dynamics of COVID-19 in the U.S.

To investigate the possible impact of a second booster dose on the dynamics of COVID-19 in the U.S., we modified the model (S.2) in SI to include an additional class (see (S.4) in SI) , which consists of individuals who have received a second booster dose (i.e., the third dose for those, who were fully vaccinated with the Johnson & Johnson vaccine and a fourth dose for those who were fully vaccinated with any of the mRNA vaccines). The rate at which a fourth booster dose is administered is 0.01096 *per day*. The simulation results obtained and depicted in Figure 9 show that administering a fourth booster dose using only the mRNA vaccines from the onset of the omicron variant (i.e., from late November 2021) would have resulted in a 20% reduction in the the number of new daily cases when the Omicron variant peaked compared to the baseline case (comparing the blue and green curves in Figure 9 (a)). Similar reductions are obtained for the cumulative cases (Figure 9 (c)). Specifically, over 3 million new cases would have been averted if a second booster that prioritized only the mRNA vaccines was implemented from late November 2021 in the U.S. Additional simulations to assess the impact on the daily and cumulative COVID-19 cases in the U.S. for various second vaccine boosting rates were performed using estimated parameters for the period from April 02 to May 27, 2022. The results of the simulations depicted in Figure 9 (b) and (d) show that if no second booster vaccine doses were administered, an 11% increase in the the number of new daily cases would have been recorded when the BA.2.12.1 VOC wave peaked compared to the baseline case (comparing the blue and magenta curves in Figure 9 (b)). This increase would have been less significant if second vaccine booster doses were administered 6 months after the first booster dose (i.e., if the second boosting rate is ≈ 0.0055). On the other hand, if second booster dose is administered barely two month after the first booster dose (i.e., if the second boosting rate is ≈ 0.0164), a 4% reduction in the the number of new daily cases would have been recorded

medRxiv preprint doi: https://doi.org/10.1101/2022.07.06.22277303; this version posted July 7, 2022. The copyright holder for this preprint (which was not certified by peer review) is the author/funder, who has granted medRxiv a license to display the preprint in perpetuity. All rights reserved. No reuse allowed without permission.

when the BA.2.12.1 VOC wave peaked compared to the baseline case (comparing the blue and green curves in Figure 9 (b)). Similar reductions are obtained for the cumulative cases (Figure 9 (d)). Specifically, if second booster doses are administered at the baseline rate of 0.011 *per day* (i.e., three months after the first dose), then 90,918,600 cumulative cases will be recorded by the end of December 2022. However, in the worst case scenario in which no second booster dose is administered, 93,148,700 cumulative cases representing a 2.5% increase from the baseline will be recorded by the end of December 2022 (comparing the blue and magenta curves in Figure 9 (d)). The increase in the cumulative number of cases will reduce to 91,891,800, which represents a 1.1% increase from baseline (comparing the blue and yellow curves in Figure 9 (d)) if second booster doses are administered six months after the first booster dose (i.e., if second booster doses are administered at rate 0.55×10^{-2} *per day*). But, if second booster doses are administered only two months after the first booster dose (i.e., if second booster doses are administered at an increased rate of 1.64×10^{-2} *per day*), 90,138,600 cumulative cases will be recorded by the end of December 2022. This represents a 1% reduction in the cumulative number of cases (comparing the blue and green curves in Figure 9 (d)) and a 3.2% reduction in the cumulative number of cases in comparison to the worst case scenario (comparing the magenta and green curves in Figure 9 (d)). Hence, a second booster vaccine dose is important in the fight against the COVID-19 pandemic in the U.S., especially if the second dose is administered within a short time period following the first booster dose.

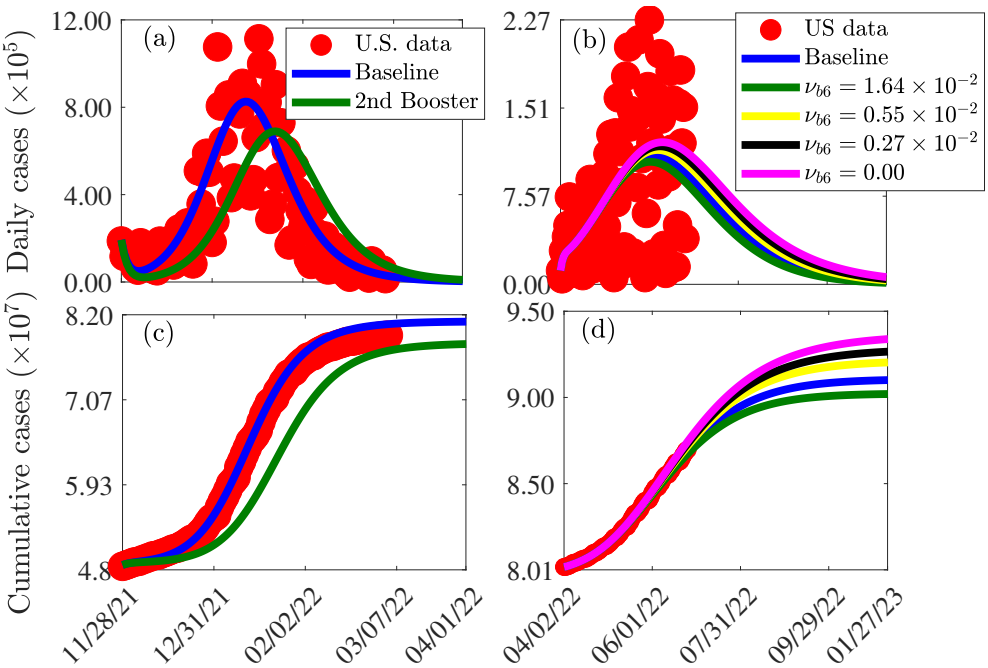

Fig. 9: Simulations of the model (S.2) with an additional booster class to assess the impact of a second booster shot on the (a) new daily and (c) cumulative COVID-19cases, and the impact of booster timing on the (b) new daily and (d) cumulative cases of COVID-19 in the U.S. The blue (green) curve is for the model with the first (second) booster dose. The parameter values used for the simulations are given in Tables S3, S7, and S8 in SI.

4.3. Assessing the impact of releasing current control measures on the number of daily COVID-19 cases in the U.S.

The modified version of the model (S.2) in SI that includes a second booster vaccine dose class was simulated using the estimated parameters in Table S8 in SI to assess the impact of relaxing vaccination and transmission reducing control measures of the impact of new variants that are more transmissible. For the case in which transmission reducing measures are relaxed, the effective transmission rates (i.e., the $\beta_j' s, j \in \{p, a, s, c, h\}$) are multiplied by $1 + c_m$, where $0 \le c_m \le 1$ is the percentage increase in transmission corresponding to the level of relaxation. The results of these simulations (Figure 10) show that if the number of people vaccinated per day is reduced by a half on May 27, 2022, then a 63% increase from the baseline peak number of confirmed cases will be recorded when the 7th wave peaks (comparing the blue and yellow curves in Figure 10 (a)), while that peak will be reduced by 58% if the reduction in vaccination rate started on July 30, 2022 (comparing the blue and yellow curves in Figure 10 (d)). Further reductions in the vaccination rate will lead to more significant increases in the number of confirmed cases. In particular, if the number of people vaccinated per day is reduced by 90% on May 27, 2022, then an 85% increase from the baseline peak number of confirmed cases will be recorded with the possibility of a rebound in the number of cases later (comparing the blue and magenta curves in

medRxiv preprint doi: https://doi.org/10.1101/2022.07.06.22277303; this version posted July 7, 2022. The copyright holder for this preprint (which was not certified by peer review) is the author/funder, who has granted medRxiv a license to display the preprint in perpetuity. All rights reserved. No reuse allowed without permission.

Figure 10 (a)), while there will be no rebound if the relaxation in vaccination started on July 30, 2022 (comparing the blue and magenta curves in Figure 10 (d)). On the other hand, if COVID-19 control measures such as mask-use and social distancing that result in a reduction in disease transmission are relaxed, a significant increase in the number of cases can occur depending on the level of relaxation. Specifically, if transmission reducing measures are relaxed by 5% on May 27, 2022, a 100% increase in the baseline number of confirmed daily cases will be registered when the next wave peaks (comparing the blue and magenta curves in Figure 10 (b)), while a wave with a smaller peak size lower be registered if the relaxation starts on July 30, 2022 (comparing the blue and magenta curves in Figure 10 (e)). More significant increases in the number of daily cases are registered if the relaxation is higher. Furthermore, increases in the number of cases will be even more significant if both vaccination and transmission reduction measures are relaxed simultaneously. In particular, if the number of people vaccinated per day is reduced by 50% and transmission reduction measures are relaxed by 15% starting on May 27, 2022, then a more devastating wave than the Omicron wave with a daily case peak greater than 3.5 times the baseline peak size will be recorded (comparing the blue and magenta curves in Figure 10 (c)).

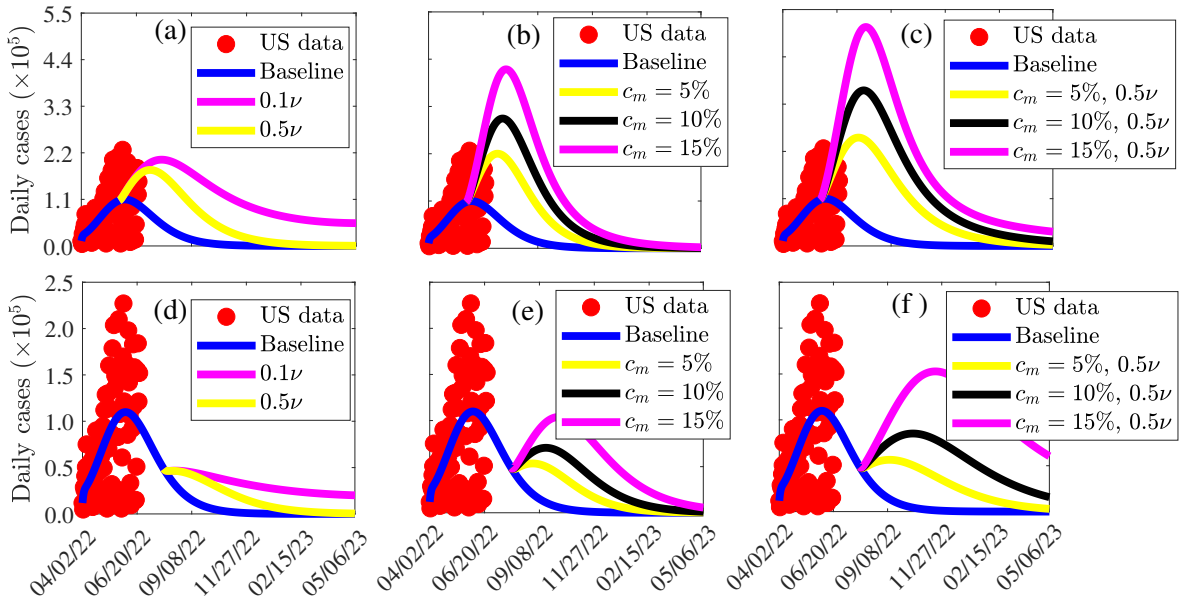

The other parameters used for the simulations are given in Tables S3-S8.

Fig. 10: Simulations of the model (S.2) in SI depicting the impact of relaxation in vaccination ((a) and (d)), transmission reducing control measures ((b) and (e)), and both vaccination and transmission reducing control measures on the daily confirmed COVID-19 cases in the U.S. The entries of the vector ν are the baseline vaccination rates associated with mRNA vaccines (ν_1) and the Johnson & Johnson vaccine (ν_0).

5. Discussion, limitations, and conclusion

5.1. Discussion

Over time, different public health interventions were implemented in the U.S. to placate the spread of the COVID-19 pandemic in the country. Among these were quarantine of suspected cases, contact tracing of the contacts of confirmed cases, isolation of confirmed cases, detection of positive cases through testing, irrespective of the stage of the infection, or whether the tested individual was known to have been in contact with a confirmed case or not, etc. Specifically, some people were tested for administrative, work-related, or travel purposes. Also, three safe and highly effective vaccines that were developed, deployed, and administered at warp speed have played a major role in curtailing the spread of the virus in the U.S. However, the effectiveness of this vaccination program is threatened by factors such as vaccine hesitancy and the emergence of various variants of concern against which most vaccines designed for the wild-type strain of the virus provide reduced or only limited cross-protection. This makes fighting COVID-19 increasingly difficult.

In this study, we formulated a basic model that accounted for the epidemiological characteristics of the disease and the detection of positive cases. The basic model was studied analytically, and trained with confirmed new daily case data for the U.S. from the beginning of the pandemic (i.e., from January 22, 2020) to the day before vaccination started

medRxiv preprint doi: https://doi.org/10.1101/2022.07.06.22277303; this version posted July 7, 2022. The copyright holder for this preprint (which was not certified by peer review) is the author/funder, who has granted medRxiv a license to display the preprint in perpetuity. All rights reserved. No reuse allowed without permission.

(i.e., December 13, 2020), and validated using cumulative COVID-19 data from the U.S. for the same period. The validation shows an excellent match between the cumulative COVID-19 case data and the cumulative cases from our model. One of the primary parameter values calibrated through this process is the detection rate of positive individuals through testing (τ). The calibrated value of τ during the pre-lockdown period (i.e., the period from January 22 to March 31, 2020 was about 0.013 *per* day, while the calibrated rate was 0.0628, 0.01, and 0.143 *per* day respectively, during the lockdown period, the second wave, and the period from the beginning of the third wave to the day before the beginning of vaccination. These results are consistent with statistics from [35, 40] indicating that at the start of the pandemic (lockdown period) in the U.S., about one in every ten (twenty) positive cases were identified through testing. In fact, during the early pandemic phase, many strategies (e.g., contact investigations) were implemented to detect infected individuals. Our estimated rate is in the COVID-19 positivity rate range reported in [35, 40].

In order to evaluate the effect of vaccines on the dynamics of SARS-CoV-2 in the U.S., we extended the basic model (2.2) to account for the administration of the single-dose Janssen vaccine and any of the two-dose mRNA vaccines approved for use in the U.S. We calibrated the parameters of this second model with confirmed new daily case data from the U.S. for the vaccination period, but before the booster period (i.e., for the period from December 14, 2020 to August 12, 2021) and validated the model with cumulative case data for the same period. Using the calibrated parameter values, we showed that during the fourth wave of the pandemic in the U.S., the Janssen vaccine contributed in reducing the control reproduction number ($\mathscr{R}_{c2}$) by 1.7%, while a single (double) dose of any of the two mRNA vaccines used in the U.S. contributed in reducing $\mathscr{R}_{c2}$ by 17.4% (31.4%). The control reproduction number for this period from our model is in the range of the values reported in [35]. Simulation results of the vaccination or extended model (using the fixed and estimated parameters given in Tables S3-S6) show that if on average, 2,000,000 people were vaccinated (with 92% of them receiving mRNA vaccines and 8% the Johnson & Johnson vaccine [16]) *per* day from the onset of vaccination in the U.S., it would have been possible to eliminate the pandemic in the U.S. by beginning of February 2023.

The vaccination model (S.1) is further extended to account for booster shot administration. This extended model is calibrated using raw (daily case) data from the beginning of the booster shots in the U.S. to the time when the first case of Omicron was reported in the country and then validated using cumulative case data for the same period. The fitting results reveal that during the pandemic wave driven by the Delta variant and when booster shots were being administered in the U.S., the control reproduction number ($\mathscr{R}_{c3}$) for the portion of the wave before the onset of boosting was double that during the boosting portion of the wave. It should be mentioned that administering booster shots contributed significantly in reducing the control reproduction number below unity–a critical level required to contain an infectious disease in a population. In particular, implementing booster shots led to a 17% reduction in $\mathscr{R}_{c3}$. Furthermore, simulations of the extended model with a booster dose showed that early and massive implementation of a booster policy in the U.S. would have enabled the disease to be contained before the emergence of the Omicron variant. Unfortunately, this is not the case since as of May 11, 2022, one in every three of Americans aged 65 and above had not yet received the first booster dose, although over 9% of individuals within this age bracket were fully vaccinated by May 8, 2022 [67].

The extended vaccination model (i.e., the vaccination model with a booster dose) is further calibrated using confirmed case data for the period from November 28, 2021 to April 01, 2022, and validated using cumulative case data for the same period (i.e., during part of the Omicron variant period in the U.S.). The remaining available daily and cumulative case data for the period from January 25, to March 9, 2022 is used to further validate the model. The validation shows an excellent match between the data and our model. Using the calibrated parameter values, we showed that the transmission rate of the Omicron variant is ≈ 3 times the transmission rate of the Delta variant, which is consistent with results in [85–87]. Also, we showed that the Control reproduction number of the Omicron variant is twice that of the Delta variant, which is in the range of control reproduction numbers reported in [87]. It is plausible that the rapid spread of the Omicron variant is due to waning immunity rather than an increase in transmissibility [88]. Furthermore, our model suggested that the Omicron variant of the pandemic in the U.S. peaked on January 13, 2022, and approximately 801,132 new cases were recorded on that day. This agrees with observed data from the U.S. Centers for Disease Control and Prevention (CDC) [89]. Further extension of the framework to include a second booster vaccine dose shows that second booster vaccine doses can contribute significantly in the fight against COVID-19, especially if these second booster doses are administered shortly after the first booster dose and if vaccines of higher efficacies such as the Pfizer-BioNTech and the Mordena vaccines are used. Specifically, our results show if second booster vaccine doses are administered two months after the first booster dose a 3.2% reduction in the number of cumulative cases (compared to the worst case scenario when no booster dose is administered) will be recorded by the end of 2022.

Our findings emphasize that earlier implementation of vaccination and booster administration is critically important

medRxiv preprint doi: https://doi.org/10.1101/2022.07.06.22277303; this version posted July 7, 2022. The copyright holder for this preprint (which was not certified by peer review) is the author/funder, who has granted medRxiv a license to display the preprint in perpetuity. All rights reserved. No reuse allowed without permission.

for controlling SARS-Cov2. In other words, the late implementation of vaccination program especially during the ascendance phase of the Outbreak will result in significant increase in the magnitude of the peak and lengthen the disease elimination time. This specific result is in agreement with precedent studies on the impact of vaccination timing during the spread of communicable diseases [58, 90, 91]. The study also shows that if on other hand, early termination of vaccination and other control measures that reduce the effective transmission rate (e.g., face-mask use), or the emergence of another VOC that is more transmissible, can lead to another catastrophic wave of the pandemic.

5.2. Limitations (caveats)

The study, has some limitations including assumptions made in building the models, which are important to mention.

- It is assumed that individuals in the infected and infectious classes, as well as recovered individuals are not vaccinated. Also, it is assumed that unvaccinated infectious and vaccinated infectious individuals have the same chance of transmitting the virus to susceptible individuals. Furthermore, it is assumed that the proportion of individuals opting for a single dose of the mRNA vaccines is negligible and has no significant effect on the transmission dynamics of the disease in the U.S. Additionally, it is assumed that only mRNA vaccines are used for boosting and that when the vaccine-derived immunity of boosted individuals wanes partially, the individuals move into a class of individuals with the same partial immunity as those who took the second dose of one of the mRNA vaccines irrespective of whether they were fully vaccinated with a two-dose vaccine or a one dose vaccine.
- Calibration of the unknown parameters of the model was carried using incidence data of confirmed new daily COVID-19 cases, which is limited in precision compared to fitting a model based on a combination of case, hospitalization, and mortality data or using wastewater data and could potentially influence the accuracy of our findings. Also, the effect of under-reporting, which is notable for COVID-19 data in the US was not accounted for.
- Although we acknowledge the impact of age-structure on the dynamics of the disease, our focus was on the impact of various vaccines and doses on the entire population. Hence, we did not account for age-structure in our study.
- We did not account for the impact of non-pharmaceutical interventions explicitly in the study. However, we believe that the parameters estimated adjusted accordingly. Also, we did not account for the impact of recently approved antiviral treatment drugs for COVID-19.
- We did not incorporate the possibility of co-infection with both the Omicron and Delta variants.

5.3. Conclusion

More than two years since the first case of SARS-CoV-2 infection was reported in China (U.S.) in late December 2019 (January 2020), the goal of ongoing non-pharmaceutical interventions and vaccine policies to contain the disease has not been achieved. In this work, we provide quantifiable evidence on the impact of different vaccines and booster shots administered in the U.S. on the incidence of COVID-19, and predict the future effects of the Omicron variant on disease dynamics. Our findings confirm the benefit of early vaccination and booster shots in reducing the pandemic surge. In the absence of vaccination, not only will the fourth wave be worse, but the pandemic will remain a major public burden for longer than expected. The administration of vaccines significantly reduced the number of cases. In particular, a hypothetical situation in which vaccination started two months earlier and vaccine-derived immunity did not wane over time showed that the disease would have been contained by June 2021. The response to waning immunity and new variants through booster shots in the country contributed significantly in reducing the number of cases. Furthermore, our study shows that a second booster dose will be useful in containing and/or curtailing the burden of the pandemic, especially if it is administered shortly after the first booster dose using vaccines of higher efficacies. Also, the study shows that not relaxing existing control measures prematurely is important, as such relaxation could result in a more devastating outbreak, especially if both vaccination strategies and measures to reduce transmission rates, such as the use of masks are eased at the same time.

Acknowledgements

CNN acknowledges the support of the Simons Foundation (Award #627346) and the National Science Foundation (Grant Number: DMS #2151870). HBT acknowledges support from the Department of Mathematics at the University of Florida for partially funding his visit and for providing him with the resources necessary to carry out this work. Furthermore, HBT acknowledges support from the European Mathematical Society Simons for Africa fellowship Program and Centre d'Excellence Africain en Sciences Mathematiques, Informatique et Applications (CEA-SMIA) Benin, for partially funding his visit to the University of Florida.

medRxiv preprint doi: https://doi.org/10.1101/2022.07.06.22277303; this version posted July 7, 2022. The copyright holder for this preprint (which was not certified by peer review) is the author/funder, who has granted medRxiv a license to display the preprint in perpetuity. All rights reserved. No reuse allowed without permission.

Author contributions

CNN conceived the study, HBT developed the model, fitted the model to data and carried out the simulations under CNN's guidance. MAB wrote the first draft of the introduction. HBT, AEI, and CNN analyzed the model. HBT and MAB wrote the first draft of the abstract, discussion, and conclusion. HBT, MAB, and CNN revised the entire paper. All authors reviewed and approved the final version of the paper.

References

[1] Zhu N, Zhang D, Wang W, Li X, Yang B, Song J, et al. A Novel Coronavirus from Patients with Pneumonia in China, 2019. New England Journal of Medicine [Internet]. 2020 Feb 20 [cited 2021 Nov 9];382(8):727–33. Available from: /pmc/articles/PMC7092803/

[2] Cucinotta D, Vanelli M. WHO declares COVID-19 a pandemic [Internet]. Vol. 91, Acta Biomedica. Acta Biomed; 2020 [cited 2021 Nov 9]. p. 157–60. Available from: https://pubmed.ncbi.nlm.nih.gov/32191675/

[3] Shim E. Projecting the impact of sars-cov-2 variants and the vaccination program on the fourth wave of the covid-19 pandemic in south korea. International Journal of Environmental Research and Public Health [Internet]. 2021 Jul 2 [cited 2021 Nov 6];18(14). Available from: https://pubmed.ncbi.nlm.nih.gov/34300029/

[4] Meo SA, Bukhari IA, Akram J, Meo AS, Klonoff DC. COVID-19 vaccines: Comparison of biological, pharmacological characteristics and adverse effects of pfizer/BioNTech and moderna vaccines. European Review for Medical and Pharmacological Sciences. 2021;25(3):1663–79.

[5] Worldmeter.com. COVID Live Update: 186,356,010 Cases and 4,026,894 Deaths from the Coronavirus [Internet]. 2021 [cited 2021 Nov 8]. Available from: https://www.worldometers.info/coronavirus/

[6] CDC. CDC COVID Data Tracker [Internet]. Centers for Disease Control and Prevention. 2020 [cited 2021 Nov 8]. p. 7–11. Available from: https://covid.cdc.gov/covid-data-tracker/#trends_dailycases

[7] Frederiksen LSF, Zhang Y, Foged C, Thakur A. The Long Road Toward COVID-19 Herd Immunity: Vaccine Platform Technologies and Mass Immunization Strategies. Vol. 11, Frontiers in Immunology. Frontiers Media S.A.; 2020.

[8] Plotkin SA. Vaccination against the major infectious diseases. C R Acad Sci III. 1999 Nov;322(11):943-51. doi: 10.1016/s0764-4469(00)87191-7. PMID: 10646088.

[9] Rabinovich NR, Orenstein WA. Vaccines. Overview. Epidemiol Rev. 1999;21(1):1-6. doi: 10.1093/oxfordjournals.epirev.a017985. PMID: 10520469.

[10] Polack FP, Thomas SJ, Kitchin N, et al. Safety and efficacy of the BNT162b2 mRNA Covid-19 vaccine. N Engl J Med. 2020;383(27):2603-2615. doi: 10.1056/NEJMoa2034577

[11] Rella SA, Kulikova YA, Dermitzakis ET, Kondrashov FA. Rates of SARS-CoV-2 transmission and vaccination impact the fate of vaccine-resistant strains. Scientific Reports [Internet]. 2021 Jul 30 [cited 2021 Nov 6];11(1):1–10. Available from: https://www.nature.com/articles/s41598-021-95025-3

[12] Dubé, Eve, et al. "Vaccine hesitancy: an overview." Human vaccines & immunotherapeutics 9.8 (2013): 1763-1773.

[13] Siddiqui, Mariam, Daniel A. Salmon, and Saad B. Omer. "Epidemiology of vaccine hesitancy in the United States." Human vaccines & immunotherapeutics 9.12 (2013): 2643-2648.

[14] Patel MD, Rosenstrom E, Ivy JS, Mayorga ME, Keskinocak P, Boyce RM, et al. Association of Simulated COVID-19 Vaccination and Nonpharmaceutical Interventions With Infections, Hospitalizations, and Mortality. JAMA Network Open [Internet]. 2021 Jun 1 [cited 2021 Nov 6];4(6):e2110782–e2110782. Available from: https://jamanetwork.com/journals/jamanetworkopen/fullarticle/2780539

[15] Centers for Disease Control and Prevention (CDC), COVID-19 Vaccines for Moderately or Severely Immunocompromised People (Accessed on March 08, 2022). https://www.cdc.gov/coronavirus/2019-ncov/vaccines/recommendations/immuno.html

[16] Centers for Disease Control and Prevention (CDC), "Different COVID-19 vaccines," CDC information (Accessed on March 08, 2022). https://www.cdc.gov/coronavirus/2019-ncov/vaccines/different-vaccines/janssen.html

medRxiv preprint doi: https://doi.org/10.1101/2022.07.06.22277303; this version posted July 7, 2022. The copyright holder for this preprint (which was not certified by peer review) is the author/funder, who has granted medRxiv a license to display the preprint in perpetuity. All rights reserved. No reuse allowed without permission.

[17] Dopico XC, Ols S, Loré K, Hedestam GBK. Immunity to SARS-CoV-2 induced by infection or vaccination. Journal of Internal Medicine [Internet]. 2021 [cited 2021 Nov 6]; Available from: https://onlinelibrary.wiley.com/doi/full/10.1111/joim.13372

[18] Alagoz O, Sethi AK, Patterson BW, Churpek M, Alhanaee G, Scaria E, et al. The impact of vaccination to control COVID-19 burden in the United States: A simulation modeling approach. PLOS ONE [Internet]. 2021 Jul 1 [cited 2021 Nov 6];16(7):e0254456. Available from: https://journals.plos.org/plosone/article?id=10.1371/journal.pone.0254456

[19] Gumel AB, Iboi EA, Ngonghala CN, Ngwa GA. Toward Achieving a Vaccine-Derived Herd Immunity Threshold for COVID-19 in the U.S. Frontiers in Public Health. 2021;9.

[20] Moline HL, Whitaker M, Deng L, Rhodes JC, Milucky J, Pham H, et al. Effectiveness of COVID-19 Vaccines in Preventing Hospitalization Among Adults Aged >65 Years — COVID-NET, 13 States, February-April 2021. MMWR Recommendations and Reports [Internet]. 2021 [cited 2021 Nov 6];70(32):1088–93. Available from: https://www.cdc.gov/mmwr/volumes/70/wr/mm7032e3.htm

[21] Pilishvili T. Interim estimates of vaccine effectiveness of Pfizer-BioNTech and Moderna COVID-19 vaccines among health care personnel — 33 U. S. Sites, January–March 2021. MMWR Morb Mortal Wkly Rep. 2021;70. doi:10.15585/mmwr.mm7020e2

[22] Mancuso M, Eikenberry SE, Gumel AB. Will vaccine-derived protective immunity curtail COVID-19 variants in the US? Infectious Disease Modelling [Internet]. 2021 [cited 2021 Nov 6];6:1110–34. Available from: https://doi.org/10.1016/j.idm.2021.08.008

[23] CDC, CDC COVID Data Tracker, Centers for Disease Control and Prevention, 2020. [Online]. Available: https://covid.cdc.gov/covid-data-tracker/#vaccinations_vacc-total-admin-rate-total. [Accessed: 10-Nov-2021].

[24] Mahase E. Covid-19: Where are we on vaccines and variants? BMJ [Internet]. 2021 Mar 2 [cited 2021 Nov 8];372:n597. Available from: https://www.bmj.com/content/372/bmj.n597

[25] Goldberg Y, Mandel M, Bar-On YM, et al. Waning immunity after the BNT162b2 vaccine in Israel. N Engl J Med. 2021;385(24):e85. doi:10.1056/NEJMoa2114228

[26] Ngonghala, Calistus N., Hemaho B. Taboe, and Abba B. Gumel. "Dynamics of the Delta and Omicron variants of SARS-CoV-2 in the United States: the battle of supremacy in the presence of vaccination, mask usage and antiviral treatment." medRxiv (2022).

[27] Marina Mancuso, Steffen E.Eikenberry and Abba B.Gumel. Will vaccine-derived protective immunity curtail COVID-19 variants in the US? Infectious Disease Modeling 6, 1110-1134 (2021).

[28] Enahoro A.Iboi, Calistus N.Ngonghal and Abba B.Gumel. Will an imperfect vaccine curtail the COVID-19 pandemic in the U.S.? Infectious Disease Modeling 5, 510-524 (2020).

[29] Giordano, G., Colaneri, M., Di Filippo, A. et al. Modeling vaccination rollouts, SARS-CoV-2 variants and the requirement for non-pharmaceutical interventions in Italy. Nat Med 27, 993–998 (2021). https://doi.org/10.1038/s41591-021-01334-5

[30] Gumel, A. B., Iboi, E. A., Ngonghala, C. N., & Ngwa, G. A. (2021). Towards achieving a vaccine-derived herd immunity threshold for COVID-19 in the US. Public Health, 23 July 2021 | https://doi.org/10.3389/fpubh.2021.709369.

[31] Moore S, Hill EM, Dyson L, Tildesley MJ, Keeling MJ (2021) Modelling optimal vaccination strategy for SARS-CoV-2 in the UK. PLoS Comput Biol 17(5): e1008849. https://doi.org/10.1371/journal.pcbi.

[32] Islam, M. R., Oraby, T., McCombs, A., Chowdhury, M. M., Al-Mamun, M., Tyshenko, M. G., & Kadelka, C. (2021). Evaluation of the United States COVID-19 vaccine allocation strategy. PloS one, 16(11), e0259700.

[33] Johns Hopkins. Coronavirus Resource Center. (n.d.). COVID-19 .United States cases by county. Johns Hopkins University & Medicine. Retrieved January 24, 2022, from https://coronavirus.jhu.edu

[34] BBC. Covid-19: First vaccine given in US as roll-out begins 2021 [Available from: https://www.bbc.com/news/world-us-canada-55305720

medRxiv preprint doi: https://doi.org/10.1101/2022.07.06.22277303; this version posted July 7, 2022. The copyright holder for this preprint (which was not certified by peer review) is the author/funder, who has granted medRxiv a license to display the preprint in perpetuity. All rights reserved. No reuse allowed without permission.

[35] Hannah Ritchie, Edouard Mathieu, Lucas Rodés-Guirao, Cameron Appel, Charlie Giattino, Esteban Ortiz-Ospina, Joe Hasell, Bobbie Macdonald, Diana Beltekian and Max Roser (2020) - "Coronavirus Pandemic (COVID-19)". Published online at OurWorldInData.org. Retrieved from: https://ourworldindata.org/coronavirus [Online Resource]

[36] King Aaron A., Domenech de Cellès Matthieu, Magpantay Felicia M. G. and Rohani Pejman 2015. Avoidable errors in the modelling of outbreaks of emerging pathogens, with special reference to EbolaProc. R. Soc. B.2822015034720150347 http://doi.org/10.1098/rspb.2015.0347

[37] Davison, Anthony Christopher, and David Victor Hinkley. Bootstrap methods and their application. No. 1. Cambridge university press, 1997.

[38] C. N. Ngonghala, E. Iboi, and A. B. Gumel, "Could masks curtail the post-lockdown resurgence of covid-19 in the US?" Mathematical Biosciences 329, 108452 (2020).

[39] Dobrovolny, Hana M. "Modeling the role of asymptomatics in infection spread with application to SARS-CoV-2." Plos one 15.8 (2020): e0236976.

[40] Johns Hopkins website. DAILY STATE-BY-STATE TESTING TRENDS (consulted on January 28,2022). https://coronavirus.jhu.edu/testing/individual-states

[41] Dubé, Eve, et al. "Vaccine hesitancy: an overview." Human vaccines & immunotherapeutics 9.8 (2013): 1763-1773.

[42] B. Curley, "How long does immunity from COVID-19 vaccination last?" Healthline (Accessed on Oct. 20, 2021).

[43] J. Seow, C. Graham, B. Merrick, S. Acors, S. Pickering, K. J. Steel, O. Hemmings, A. O'Byrne, N. Kouphou, R. P. Galao, et al., "Longitudinal observation and decline of neutralizing antibody responses in the three months following SARS-CoV-2 infection in humans," Nature Microbiology 5, 1598–1607 (2020).

[44] J. M. Dan, J. Mateus, Y. Kato, K. M. Hastie, E. D. Yu, C. E. Faliti, A. Grifoni, S. I. Ramirez, S. Haupt, A. Frazier, C. Nakao, V. Rayaprolu, S. A. Rawlings, B. Peters, F. Krammer, V. Simon, E. O. Saphire, D. M. Smith, D. Weiskopf, A. Sette, and S. Crotty, "Immunological memory to SARS-CoV-2 assessed for up to 8 months after infection," Science 371 (2021).

[45] Mahase, Elisabeth. "Delta variant: What is happening with transmission, hospital admissions, and restrictions?." (2021). https://www.bmj.com/content/373/bmj.n1513.full

[46] Callaway, Ewen, and Heidi Ledford. "How bad is Omicron? What scientists know so far." Nature 600.7888 (2021): 197-199.

[47] Del Rio, Carlos, Saad B. Omer, and Preeti N. Malani. "Winter of omicron—the evolving COVID-19 pandemic." JAMA 327.4 (2022): 319-320.

[48] Ngonghala, Calistus N., Enahoro A. Iboi, and Abba B. Gumel. "Could masks curtail the post-lockdown resurgence of COVID-19 in the US?." Mathematical biosciences 329 (2020): 108452.

[49] Tindale L.C., Stockdale J.E., Coombe M., Garlock E.S., Lau W.Y.V., Saraswat M., Zhang L., Chen D., Wallinga J., Colijn C. Evidence for transmission of COVID-19 prior to symptom onset eLife, 9 (2020), Article e57149

[50] Moghadas S.M., Fitzpatrick M.C., Sah P., Pandey A., Shoukat A., Singer B.H., Galvani A.P. The implications of silent transmission for the control of COVID-19 outbreaks Proc. Natl. Acad. Sci. (2020)

[51] C. N. Ngonghala, and Abba B. Gumel. Mathematical assessment of the role of vaccination against COVID-19 in the United States (2021)

[52] Alene M, Yismaw L, Assemie MA, Ketema DB, Mengist B, Kassie B, et al. (2021) Magnitude of asymptomatic COVID-19 cases throughout the course of infection: A systematic review and metaanalysis. PLoS ONE 16(3): e0249090. https://doi. org/10.1371/journal.pone.0249090

[53] Press release. https://news.yahoo.com/fda-panel-endorses-johnson-johnson-173029195.html (on Oct. 28th, 2021)

[54] E. Mahase, "Covid-19: Pfizer vaccine efficacy was 52% after first dose and 95% after second dose, paper shows," (2020).

medRxiv preprint doi: https://doi.org/10.1101/2022.07.06.22277303; this version posted July 7, 2022. The copyright holder for this preprint (which was not certified by peer review) is the author/funder, who has granted medRxiv a license to display the preprint in perpetuity. All rights reserved. No reuse allowed without permission.

[55] Z. Chagla, "The bnt162b2 (biontech/pfizer) vaccine had 95% efficacy against covid-19 geq 7 days after the 2nd dose," Annals of Internal Medicine 174, JC15 (2021).

[56] Andrews, N., Stowe, J., Kirsebom, F., Toffa, S., Rickeard, T., Gallagher, E., ... & Bernal, J. L. (2021). Effectiveness of COVID-19 vaccines against the Omicron (B. 1.1. 529) variant of concern. MedRxiv.

[57] ARIA BENDIX & ANDREW DUNN (2021). The First Study Assessing Pfizer's Effectiveness Against Omicron. https://www.sciencealert.com/small-preliminary-study-suggests-a-40-fold-reduction-in-ant (consultated on December 20, 2022).

[58] C. N. Ngonghala, J. R. Knitter, L. Marinacci, M. H. Bonds, and A. B. Gumel, "Assessing the impact of widespread respirator use in curtailing covid-19 transmission in the usa," Royal Society open science8,107210699 (2021).

[59] Preliminary findings from studies in South Africa indicate that omicron has a much higher rate of asymptomatic 'carriage' than other variants of concern (Press Release as: Monday, January 10, 2022 - 14:35) https://www.samrc.ac.za/media-release/preliminary-findings-studies-south-africa-indicate-omicron-has-much-higher-rate

[60] Subramanian, R., He, Q., & Pascual, M. (2021). Quantifying asymptomatic infection and transmission of COVID-19 in New York City using observed cases, serology, and testing capacity. Proceedings of the National Academy of Sciences, 118(9).

[61] L. Peng, W. Yang, D. Zhang, C. Zhuge, and L. Hong, "Epidemic analysis of COVID-19 in China by dynamical modeling," arXiv preprint arXiv:2002.06563 (2020). Online Version

[62] C. Zhou, "Evaluating new evidence in the early dynamics of the novel coronavirus COVID-19 out-break in Wuhan, China with real time domestic traffic and potential asymptomatic transmissions," medRxiv (2020).

[63] N. M. Linton, T. Kobayashi, Y. Yang, K. Hayashi, A. R. Akhmetzhanov, S.-m. Jung, B. Yuan, R. Kinoshita, and H. Nishiura, "Incubation period and other epidemiological characteristics of 2019 novel coronavirus infections with right truncation: a statistical analysis of publicly available case data," Journal of clinical medicine 9, 538 (2020).

[64] H. Sun, Y. Qiu, H. Yan, Y. Huang, Y. Zhu, and S. X. Chen, "Tracking and Predicting COVID-19 Epidemic in China Mainland," medRxiv (2020).

[65] L. Zou, F. Ruan, M. Huang, L. Liang, H. Huang, Z. Hong, J. Yu, M. Kang, Y. Song, J. Xia, et al., "SARS-CoV-2 viral load in upper respiratory specimens of infected patients," New England Journal of Medicine 382, 1177–1179 (2020).

[66] S. M. Kissler, C. Tedijanto, E. Goldstein, Y. H. Grad, and M. Lipsitch, "Projecting the transmission dynamics of sars-cov-2 through the postpandemic period," Science 368, 860–868 (2020).

[67] Liz Szabo. Covid booster rollout needs a reboot to save older Americans. Kaiser Health News. Accessed on June 30, 2022. https://www.nbcnews.com/health/health-news/covid-booster-rollout-needs-reboot-older-americans-experts-say-rcna28235

[68] N. M. Ferguson, D. Laydon, G. Nedjati-Gilani, N. Imai, K. Ainslie, M. Baguelin, S. Bhatia, A. Boonyasiri, Z. Cucunuba, G. Cuomo-Dannenburg, et al., "Impact of non-pharmaceutical inter- ́ ventions (NPIs) to reduce COVID-19 mortality and healthcare demand," London: Imperial College COVID-19 Response Team, March 16 (2020).

[69] Castillo-Chavez, Carlos, and Baojun Song. "Dynamical models of tuberculosis and their applications." Mathematical Biosciences & Engineering 1, no. 2 (2004): 361.

[70] Center for Disease Control and Prevention, CDC. Timing of Your Second Shot (2021). https://www.cdc.gov/coronavirus/2019-ncov/vaccines/second-shot.html

[71] Van den Driessche, Pauline, and James Watmough. "Reproduction numbers and sub-threshold endemic equilibria for compartmental models of disease transmission." Mathematical biosciences 180, no. 1-2 (2002): 29-48.

[72] Nadim, Sk Shahid, and Joydev Chattopadhyay. "Occurrence of backward bifurcation and prediction of disease transmission with imperfect lockdown: A case study on COVID-19." Chaos, Solitons & Fractals 140 (2020): 110163.

[73] Blayneh, Kbenesh W., et al. "Backward bifurcation and optimal control in transmission dynamics of West Nile virus." Bulletin of mathematical biology 72.4 (2010): 1006-1028.

medRxiv preprint doi: https://doi.org/10.1101/2022.07.06.22277303; this version posted July 7, 2022. The copyright holder for this preprint (which was not certified by peer review) is the author/funder, who has granted medRxiv a license to display the preprint in perpetuity. All rights reserved. No reuse allowed without permission.

[74] Sharomi, O., et al. "Role of incidence function in vaccine-induced backward bifurcation in some HIV models." Mathematical Biosciences 210.2 (2007): 436-463.

[75] Rashid, Harunor, Gulam Khandaker, and Robert Booy. "Vaccination and herd immunity: what more do we know?." Current opinion in infectious diseases 25.3 (2012): 243-249.

[76] Gumel, Abba B., et al. "Toward achieving a vaccine-derived herd immunity threshold for COVID-19 in the US." Frontiers in Public Health 9 (2021).

[77] Odo Diekmann and J. A. P. Heesterbeek and Johan A. J. Metz. On the definition and the computation of the basic reproduction ratio R0 in models for infectious diseases in heterogeneous populations. Journal of Mathematical Biology (1990) 28,365-382

[78] Center for Disease Control and Prevention, CDC. "Who Is Eligible for a COVID-19 Vaccine Booster Shot?" Accessible on: https://www.cdc.gov/coronavirus/2019-ncov/vaccines/booster-shot.html

[79] Khoury, D.S., Cromer, D., Reynaldi, A. et al. Neutralizing antibody levels are highly predictive of immune protection from symptomatic SARS-CoV-2 infection. Nat Med 27, 1205–1211 (2021). https://doi.org/10.1038/s41591-021-01377-8

[80] Sunmi Lee, Okbun Baek, and Luis Melara. Resource allocation in two-patch epidemic model with state-dependent dispersal behaviors using optimal control. Processes, 8(9):1087, September 2020. doi: 10.3390/pr8091087. https://www.mdpi.com/2227-9717/8/9/1087. Number: 9 Publisher: Multidisciplinary Digital Publishing Institute.

[81] Kim DS, Rowland-Jones S, Gea-Mallorquí E. Will SARS-CoV-2 Infection Elicit Long-Lasting Protective or Sterilising Immunity? Implications for Vaccine Strategies (2020). Front Immunol. 2020 Dec 9;11:571481. doi: 10.3389/fimmu.2020.571481. PMID: 33362759; PMCID: PMC7756008.

[82] Bilgili, F., Dundar, M., Kuşkaya, S., Lorente, D. B., Ünlü, F., Gençoğlu, P., & Muğaloğlu, E. (2021). The Age Structure, Stringency Policy, Income, and Spread of Coronavirus Disease 2019: Evidence From 209 Countries. Frontiers in psychology, 11, 632192. https://doi.org/10.3389/fpsyg.2020.632192

[83] CDC COVID-19 Study Shows mRNA Vaccines Reduce Risk of Infection by 91 Percent for Fully Vaccinated People. (Press Release Monday, June 7, 2021)https://www.cdc.gov/media/releases/2021/p0607-mrna-reduce-risks.html

[84] H. B,. Taboe, K. V. Salako , C.N. Ngonghala., and R. Glèlè Kakaï, 2020. Predicting COVID-19 spread and public health needs to contain the pandemic in West-Africa. *submitted to Mathematical Biosciences.* https://doi.org/10.1101/2020.05.23.20111294

[85] Callaway, Ewen, and Heidi Ledford. "How bad is Omicron? What scientists know so far." Nature 600.7888 (2021): 197-199.

[86] Andrews, Nick, et al. "Effectiveness of COVID-19 vaccines against the Omicron (B. 1.1. 529) variant of concern." MedRxiv (2021).

[87] Nishiura, H., Ito, K., Anzai, A., Kobayashi, T., Piantham, C., & Rodríguez-Morales, A. J. (2022). Relative reproduction number of SARS-CoV-2 Omicron (B. 1.1. 529) compared with Delta variant in South Africa. Journal of clinical medicine, 11(1), 30.

[88] Lyngse, F. P., Mortensen, L. H., Denwood, M. J., Christiansen, L. E., Møller, C. H., Skov, R. L., ... & Kirkeby, C. T. (2021). SARS-CoV-2 Omicron VOC Transmission in Danish Households. medRxiv.

[89] Center for Disease Control and Prevention (CDC). Trends in Number of COVID-19 Cases and Deaths in the US Reported to CDC, by State/Territory (consultated on January 28,2022). https://covid.cdc.gov/covid-data-tracker/#trends_dailycases

[90] Ferdinands, Jill M., et al. "Waning of influenza vaccine protection: exploring the trade-offs of changes in vaccination timing among older adults." Clinical Infectious Diseases 70.8 (2020): 1550-1559.

medRxiv preprint doi: https://doi.org/10.1101/2022.07.06.22277303; this version posted July 7, 2022. The copyright holder for this preprint (which was not certified by peer review) is the author/funder, who has granted medRxiv a license to display the preprint in perpetuity. All rights reserved. No reuse allowed without permission.

[91] Fisman D, Tuite A. Projected impact of vaccination timing and dose availability on the course of the 2014 west african ebola epidemic. PLoS Curr. 2014;6:ecurrents.outbreaks.06e00d0546ad426fed83ff24a1d4c4cc. Published 2014 Nov 21. doi:10.1371/currents.outbreaks.06e00d0546ad426fed83ff24a1d4c4cc

[92] Wang, X., Wu, H., & Tang, S. (2021). Assessing age-specific vaccination strategies and post-vaccination reopening policies for COVID-19 control using SEIR modeling approach. medRxiv.