Decreased Diastolic Hydraulic Forces Incrementally Associate With Survival Beyond Conventional Measures of Diastolic Dysfunction

Dhnanjay Soundappan[a,b], Angus Fung[a,b], Daniel E Loewenstein MD[a,c], David Playford MBBS PhD[d], Geoffrey Strange PhD[d,e], Rebecca Kozor MBBS PhD[a], James Otton MBBS PhD[f], Martin Ugander MD PhD[a,b,c]

[a]Kolling Institute, Royal North Shore Hospital, and University of Sydney, Sydney, Australia
[b]St Vincent's Clinical School, University of New South Wales, Sydney, Australia
[c]Department of Clinical Physiology, Karolinska University Hospital, and Karolinska Institutet, Stockholm, Sweden
[d]School of Medicine, University of Notre Dame, Fremantle, Australia
[e]Faculty of Medicine and Health, University of Sydney, Sydney, Australia
[f]Department of Cardiology, Liverpool Hospital, University of New South Wales, Liverpool, Australia

Word count: 3,406 (text excluding references, figure legends, and tables)

Address for correspondence:
Professor Martin Ugander, MD, PhD, FCSANZ
Kolling Building, Level 12, Royal North Shore Hospital
St Leonards, Sydney, NSW 2065, Australia
E-mail: martin.ugander@sydney.edu.au, mobile: +61481134220

Abstract and Keywords

AIMS: Decreased hydraulic forces during diastole contribute to reduced left ventricular (LV) filling and heart failure with preserved ejection fraction. However, their association with diastolic function and patient outcomes are unknown. The aim of this study was to determine the association between diastolic hydraulic forces, estimated by echocardiography as the atrioventricular area difference (AVAD), and both diastolic function and survival.

METHODS AND RESULTS: Patients (n=11,734, median [interquartile range] 3.9 [2.4–5.0] years follow-up, 1,213 events) were selected from the National Echo Database Australia based on the presence of relevant transthoracic echocardiographic measures, LV ejection fraction (LVEF) ≥50%, heart rate 50-100 beats/minute, the absence of moderate or severe valvular disease, and no prior cardiac surgery. AVAD was calculated as the cross-sectional area difference between the LV and left atrium. LV diastolic dysfunction was graded according to 2016 guidelines. AVAD was weakly associated with E/e', left atrial volume index, and LVEF (multivariable global R2=0.15, p<0.001), and not associated with e' and peak tricuspid regurgitation velocity. Decreased AVAD was independently associated with poorer survival, and demonstrated improved model discrimination after adjustment for diastolic function grading (C-statistic [95% confidence interval] 0.645 [0.629–0.662] vs 0.607 [0.592–0.623], p<0.001) and E/e' (0.639 [0.623–0.655] vs 0.621 [0.604–0.637], p<0.001), respectively.

CONCLUSION: Decreased hydraulic forces, estimated by AVAD, are weakly associated with diastolic dysfunction and demonstrate an incremental prognostic association with survival beyond conventional measures used to grade diastolic dysfunction.

KEYWORDS: Diastolic function, Heart failure with preserved ejection fraction, Echocardiography, Prognosis

Introduction

Diastolic dysfunction contributes to the development of elevated left ventricular filling pressures and subsequent heart failure with preserved ejection fraction (HFpEF). Consequently, the physiological mechanisms underlying diastolic function remain an area of ongoing research in an attempt to develop effective therapeutic interventions for patients with HFpEF. Diastolic function is a composite description of the interaction between the mechanisms driving LV filling and the passive tension opposing LV filling. The net effects of driving and opposing mechanisms of filling are responsible for lengthening the cardiomyocytes, increasing the volume of the LV, and generating the atrioventricular pressure gradient (1,2). The term diastolic dysfunction can refer to any mechanical abnormalities present during diastole which impair ventricular relaxation and filling (3).

Hydraulic forces have recently been identified as a mechanism contributing to LV diastolic function (4). Hydraulic force is calculated as the product of the pressure in a liquid, and the surface area with which that liquid is in contact, in accordance with Pascal's Law (5). Also, the blood pressure in both chambers of the left heart is nearly identical during diastole (6). Consequently, the difference in cross-sectional short-axis area between the LV and left atrium (LA) provides the geometric basis for a net hydraulic force exuded on the atrioventricular plane in the apex-to-base direction of the LV (Figure 1). This difference is termed the atrioventricular area difference (AVAD), and can be used as a surrogate measure of net hydraulic force.

Cardiac anatomy in healthy volunteers has already been shown to demonstrate a net hydraulic force directed towards the LA and thus contributing to LV filling during most of diastole (4). This finding proves the presence of the prerequisite anatomy for the generation of a net hydraulic force directed towards the atrium for most of diastole in healthy individuals. This

force is expected to contribute to the diastolic longitudinal motion of the atrioventricular plane, facilitating the lengthening of the LV and accounting for between 10% and 60% of the peak driving force of LV filling in healthy subjects (4). Applying these findings to a clinical population, a recent study investigating changes to diastolic hydraulic forces in patients with pathological cardiac remodelling found that patients with HFpEF had a smaller AVAD compared to healthy controls throughout diastole, possibly limiting LV filling and contributing to the diastolic dysfunction (7).

Although hydraulic forces have been demonstrated to be a physiological mechanism contributing to diastolic filling in healthy and diseased states, their association with diastolic function and patient outcomes remains unknown. Furthermore, if a decrease in hydraulic force is independently associated with survival, this mechanism could be a potential therapeutic target in HFpEF. Specifically, established methods for LA reduction surgery may provide an opportunity to decrease LA size relative to LV size, in an attempt to aid the contribution of hydraulic forces to LV filling. Therefore, the aim of this study was to determine the association between diastolic hydraulic forces and both diastolic function and survival. We hypothesised that decreased diastolic hydraulic forces would be associated with diastolic dysfunction and poorer survival.

Methods

Study Design.

The study population was derived using data from the National Echo Database Australia (NEDA). NEDA has retrospectively and prospectively collected digital transthoracic echocardiographic measurements from patients referred to laboratories across Australia, and is linked to health outcome data, as previously described (8). The study complies with the Declaration of Helsinki, and has received approval from the lead ethics committee at the Royal Prince Alfred Hospital, Camperdown, Sydney, Australia (2019/ETH06989), as well as the human research ethics committees of all participating centers in Australia, respectively. The inclusion criteria for the study cohort were the presence of relevant echocardiographic measures, a left ventricular ejection fraction greater than or equal to 50%, sinus rhythm, and a heart rate between 50 and 100 beats per minute. Echocardiographic measures of interest included LV end-diastolic diameter, LA end-systolic diameter, and at least two measures of diastolic function [E to septal e' velocity ratio (E/e'), septal e' velocity (e' velocity), LA volume index (LAVI), or tricuspid regurgitation peak velocity]. These measures were selected as they are the recommended variables in the 2016 American Society of Echocardiography (ASE) and the European Association of Cardiovascular Imaging (EACVI) guidelines for evaluating LV diastolic function in patients (9). Exclusion criteria included moderate or severe valvular heart disease, and prosthetic valves. In instances where multiple echocardiograms were available for a single patient, only the earliest recorded echocardiogram was included. The patient inclusion flowchart is described in Figure 2.

Image analysis.

AVAD was calculated as the difference between LV and LA cross-sectional areas. LV and LA cross-sectional area were calculated by circular approximation using LV end-diastolic

diameter and LA end-systolic diameter, respectively (Figure 3). For all measures, the designation of end diastole and end systole refers to LV systole and diastole. Using any available measures of diastolic function, patients were then graded using the 2016 ASE/EACVI guidelines (9). Specifically, patients were graded as having normal diastolic function if less than half of the available parameters met cut off values, indeterminate diastolic function if exactly half met cut off values, and diastolic dysfunction if more than half met cut off values.

Statistical Analysis.

All statistical analyses were conducted using programming language, R (R Core Team, R Foundation for Statistical Computing, Vienna, Austria). The characteristics of the study cohort were calculated and reported as the median [interquartile range]. Differences in measured variables between patients were assessed using Wilcoxon rank-sum test. Univariable and multivariable linear regression were used to determine the relationship between AVAD and parameters of diastolic function. Both univariable and multivariable analysis was conducted in patient subgroups based on the availability of diastolic function measures. R^2 values were used to represent the proportion of the variation in AVAD explained by the variables, whilst standardised beta coefficients were used to facilitate comparison between variables regarding their strength of association with AVAD. Survival analysis was conducted to examine the association between selected variables and time to death using Kaplan-Meier curves and Cox proportional hazards models. The end-points used for survival analysis were 5-year all-cause mortality and 5-year cardiovascular mortality. Univariable Cox regression models were used to evaluate the association between survival and AVAD, E/e', and diastolic function grading, respectively. Multivariable Cox regression models were used to evaluate the association between AVAD and survival, adjusting for conventional parameters of diastolic function. Finally, multivariable analyses were repeated

in patient subgroups stratified by clinically relevant LVEF ranges. The proportional hazards assumption was confirmed by visual inspection of the Schoenfeld residuals, and by demonstrating a non-significant relationship between the residuals and time. Wald's chi-square values were reported to compare the strength of association of different variables within regression models. Hazard ratios for continuous variables were scaled by a standard deviation to allow for reasonable comparison between models, whilst hazard ratios for diastolic function grading were reported using normal diastolic function as a reference level. The goodness of fit of univariable and multivariable models was compared using the concordance (C) statistic, and the difference used to evaluate the incremental prognostic value of AVAD. Testing of differences in C-statistics was performed using a one-shot nonparametric approach that is not dependent on the presence or absence of overlap between the 95% confidence intervals of the two C-statistics that are being compared (10). A p-value less than 0.05 was considered statistically significant.

Results

Study population.

The population considered for this study consisted of 11,734 patients, with cohort characteristics presented in Table 1. Patients were followed up for 3.9 [2.4–5.0] years, with 1,213 deaths occurring over this period. When comparing patients above and below the median AVAD of the population, all measures of diastolic function were consistent with better diastolic function in patients with an AVAD above the median ($p<0.001$ for all).

Atrioventricular area difference and diastolic function.

AVAD was univariably associated with E/e', e' velocity, LAVI, peak tricuspid regurgitation velocity and LVEF. In multivariable linear regression, only E/e', LAVI and LVEF remained associated with AVAD, with an overall weak association (global adjusted $R^2=0.15$, $p<0.001$, Table 2).

Prognostic value of atrioventricular area difference.

The results of univariable and multivariable Cox regression analyses using 5-year all-cause mortality as the outcome measure are summarised in Tables 3 and 4. In univariable Cox regression, AVAD was positively associated with survival (hazard ratio (HR) [95% confidence interval (CI)] 1.37 [1.29–1.44] per 1 SD decrement, $p<0.001$, Table 3) and E/e' was negatively associated with survival (HR [95% CI] 1.43 [1.37–1.49] per 1 SD increment, $p<0.001$, Table 4). Both diastolic dysfunction and indeterminate diastolic function were associated with poorer survival compared to normal diastolic function (HR [95% CI] 3.02 [2.66–3.42], $p<0.001$ for diastolic dysfunction). The Kaplan-Meier survival curves for these univariable analyses are represented in Figure 4. In multivariable analyses, AVAD demonstrated improved model discrimination when included with diastolic function grading (C-statistic [95% CI] 0.645 [0.629–0.662] vs 0.607 [0.592–0.623], $p<0.001$, Table 3) and

E/e’ (C-statistic [95% CI] 0.639 [0.623–0.655] vs 0.621 [0.604–0.637], p<0.001, Table 4) respectively. These results were unchanged when cardiovascular mortality was used as the outcome measure (Supplemental Tables 1 and 2). Additionally, a similar trend in results was observed when patients were stratified into subgroups of 50% ≤ LVEF < 60%, 60% ≤ LVEF < 75% and 75% ≤ LVEF (Supplemental Tables 3 and 4).

Discussion

The main finding of this study is that decreased diastolic hydraulic forces, estimated by AVAD, are associated with poor survival. This association between diastolic hydraulic forces and survival is independent of, and incremental to, current measures of diastolic function. Taken together, this suggests that further investigation evaluating increased LA size relative to LV size as a potential therapeutic target in HFpEF is justified.

Diastolic hydraulic forces provide a macroscopic explanation to a part of the physiology behind diastolic function. Considering the nearly identical LA and LV pressures during diastole, the difference in surface area, measured as AVAD, is mathematically the main determinant of these forces (4,6). The contribution of diastolic hydraulic forces to LV filling in health has been found to be of comparable magnitude to other diastolic mechanisms such as active relaxation and restoring forces (4). Meanwhile, the conventional parameters recommended by the ASE/EACVI guidelines to grade diastolic function account for the contribution of LV early diastolic recoil, LV relaxation, LV filling pressure, and LA pressure (11). The recommended algorithm from these guidelines has been previously associated with increased cardiovascular-related and all-cause mortality (12). As such, the current study shows that AVAD provides prognostic value beyond these measures to predict survival in a clinical population. When compared directly with E/e', which is the echocardiographic parameter most closely related to LV filling pressure (13,14), AVAD retained an independent association with survival, albeit with a somewhat weaker strength of association. These results, including the finding of merely a weak association between AVAD and conventional diastolic measures, indicate that AVAD provides novel information when assessing diastolic function and prognosis in patients.

Method for calculating AVAD.

Our study calculated AVAD as the difference between approximated LV end-diastolic and LA end-systolic cross-sectional areas, respectively. Routine echocardiographic measurements of the LV are performed at end systole and end diastole, while the dimensions of the LA are most commonly measured only at end systole. However, the contribution of AVAD to the net diastolic hydraulic force is most accurately calculated as the difference between LV and LA cross-sectional area in mid diastole, specifically mid diastasis, as this is the point in the cardiac cycle when LA and LV pressures equalise (4). Whilst there is no meaningful magnitude of change in LV cross-sectional area between mid diastasis and end diastole, LA cross-sectional area is greater at end systole than at mid diastasis (4). Specifically, in a study of healthy volunteers, LV short-axis area increased from 23cm^2 to 24cm^2 between mid diastasis and end diastole, and LA short-axis area increased from 14cm^2 to 19cm^2 between mid diastasis and end systole(4). This change in area is related to the movement of the mitral annular plane, also referred to as mitral annular plane systolic excursion (MAPSE) (15,16). Specifically, as the mitral annular plane is displaced towards the apex during systole, LA cross-sectional area increases. To account for the potential influence of MAPSE on our measurement of AVAD, we repeated our statistical analyses in patients stratified by subgroups of LVEF above 50%, and observed a similar trend in results. It is well established that MAPSE is positively associated with LVEF (17-20). Therefore, it can be inferred that patients with a similar LVEF also have an adequately similar MAPSE. Consequently, the movement of the mitral annular plane does not considerably affect the differences in AVAD between patients with a similar LVEF. This is supported by the negligibly weak association found between AVAD and LVEF within each subgroup of LVEF above 50% (R^2=0.01-0.02, $p<0.001$, Supplemental Table 5). As such, when comparing patients with similar LVEF, AVAD measured using LV end-diastolic diameter and LA end-systolic diameter can be used

as a reasonable surrogate for diastolic hydraulic forces that otherwise ideally would be based on AVAD measured in both the LV and LA at mid-diastole.

The relative geometry of the left ventricle and left atrium.

Cardiac geometry is known to play an integral role in cardiovascular health. Changes to the structure of the LV and LA, either independently or simultaneously, have been demonstrated to impair function and contribute to cardiovascular disease and outcomes (21-27). Whilst LA and LV measures are often studied separately, it has been suggested that a single parameter accounting for the complex interplay between LA and LV physiology may be a better and more clinically useful predictor of cardiovascular disease and survival (28). Extending on these ideas, it has recently been demonstrated that a left atrioventricular coupling index (LACI) was a strong predictor of cardiovascular events and death, with improved discrimination and reclassification power when compared to individual LA and LV measures (28). LACI was calculated by dividing LA end-diastolic volume by LV end-diastolic volume, with the authors acknowledging that LA and LV function and pressure are most closely related during diastole. In light of the findings in the current study, the findings using LACI also represent an approximate surrogate measure of diastolic hydraulic forces, albeit without specifically measuring the difference in LV and LA short-axis cross-sectional areas.

The potential of left atrial reduction surgery.

The independent prognostic value of AVAD indicates that increased LA size relative to LV size may be a new therapeutic target in patients with HFpEF. In HFpEF, elevated LV filling pressures are propagated to the LA, resulting in remodelling and dilatation in response to the increased pressure (22,27,29). This may result in the LA cross-sectional area becoming equal to or larger than the LV cross-sectional area during the cardiac cycle, thereby orienting the net diastolic hydraulic force towards the apex of the heart and opposing LV filling (7).

Decreasing LA size in these patients could restore the contribution of diastolic hydraulic forces to LV filling, potentially improving both diastolic function and survival. LA reduction surgery is already an established procedure (30-34) primarily indicated alongside other surgical procedures to treat an enlarged LA or chronic atrial fibrillation in patients with mitral valve disease (31). Several studies have highlighted the benefits of LA reduction surgery in these circumstances, most commonly resulting in increased restoration and maintenance of sinus rhythm, with no significant increases in mortality or post-operative complications (35-41). The exact mechanism for these improvements is not clearly understood. However, it is thought to be related to electrophysiological remodelling and increased wall stress (42,43). We hypothesise that the benefits of LA reduction surgery can also be attributed to the subsequent improvement in net diastolic hydraulic force and diastolic function. Diastolic dysfunction is thought to contribute to increased atrial afterload, stretching and wall stress, ultimately increasing the risk of atrial fibrillation (44,45). Considering the importance of cardiac geometry and diastolic function in HFpEF as well, the current results support the notion that LA reduction surgery concomitant with otherwise indicated open-heart surgery is a treatment option that merits prospective evaluation with regards to improving symptoms and outcomes in carefully selected patients with HFpEF.

Limitations.

As it currently stands, NEDA does not contain clinical data relating to patient comorbidities, cardiovascular disease risk factors, and pharmacotherapy. This information may impact results, as these clinical details affect both survival and diastolic function, especially since the NEDA population primarily consists of patients referred for echocardiography due to known or suspected cardiovascular disease. Nevertheless, echocardiographic data paired with survival from NEDA has been previously used to draw important prognostic information on pulmonary hypertension, aortic stenosis, and diastolic dysfunction, reflecting the robustness

of using mortality end-points despite a lack of clinical data (12,46-49). Furthermore, the variables selected for analyses were limited by the availability of data. For example, in the total NEDA population there are 336,202 observations of E to septal e' ratio, but only 39,884 observations of E to lateral e' ratio. Of these patients, the average E to e' ratio could only be calculated in 38,020 cases. Consequently, E to septal e' ratio and septal e' were selected to be included in analyses to maximise the final study cohort. Whilst septal e' is not an accurate measure of diastolic function in patients with a large septal myocardial infarction, these patients are unlikely to have a LVEF greater than or equal to 50%, and hence would have been excluded from our study. Overall, despite relative limitations in data availability, it was ensured that there were no non-physiological outlier values in the data, and that the ASE/EACVI guidelines could still be followed. Additionally, our methodology may have been limited by measurement variability inherent to the simplified assumption of circular cross-sectional areas and the variability in selecting the locations of measuring LV and LA diameters. However, our ability to consistently demonstrate clear prognostic value using clinically acquired data despite this variability indicates the robustness of these prognostic relationships. Finally, it is important to consider inter-observer and inter-site repeatability, since NEDA data is collected from more than 20 different echocardiography laboratories across Australia. This is accounted for by stringent NEDA protocols implemented during data acquisition and processing. Inspection of descriptive statistics of the included measures (data not shown) also did not indicate any reason for concern regarding systematic variations in the data. In light of the findings and limitations of the current study, future studies should look to further validate the prognostic value of AVAD, while overcoming the limitations of the current study by ideally measuring AVAD in mid diastole (diastasis), and including relevant clinical characteristics.

Conclusions

A decrease in diastolic hydraulic forces, estimated by AVAD, is weakly associated with diastolic dysfunction, and independently associated with poorer survival in a clinical population referred for echocardiography. Increased LA size relative to the LV may impair the longitudinal motion of the atrioventricular plane during diastole, impairing LV filling and contributing to a poorer prognosis for patients with cardiovascular disease.

Funding: This work was supported by grants to MU from New South Wales Health; Heart Research Australia, and the University of Sydney.

Acknowledgements

The authors acknowledge and thank Professor Håkan Arheden, Lund University, Sweden, for valuable discussions and input.

References

1. Aggarwal A, Brown KA, LeWinter MM. Diastolic dysfunction: pathophysiology, clinical features, and assessment with radionuclide methods. J Nucl Cardiol 2001;8:98-106.
2. Chung CS, Shmuylovich L, Kovács SJ. What global diastolic function is, what it is not, and how to measure it. Am J Physiol Heart Circ Physiol 2015;309:1392-1406.
3. Zile MR, Brutsaert DL. New concepts in diastolic dysfunction and diastolic heart failure: part I. Circulation 2002;105:1387-1393.
4. Maksuti E, Carlsson M, Arheden H, Kovács SJ, Broomé M, Ugander M. Hydraulic forces contribute to left ventricular diastolic filling. Sci Rep 2017;7:43505.
5. Anselmo D, Hidalgo J, Queiroz D. Pascal's principle revisited: a critical review of physics undergraduate textbooks. Eur J Phys 2020;41:63001.
6. Flachskampf FA, Biering-Sørensen T, Solomon SD, Duvernoy O, Bjerner T, Smiseth OA. Cardiac imaging to evaluate left ventricular diastolic function. JACC Cardiovasc Imaging 2015;8:1071-1093.
7. Steding-Ehrenborg K, Hedström E, Carlsson M et al. Hydraulic force is a novel mechanism of diastolic function that may contribute to decreased diastolic filling in HFpEF and facilitate filling in HFrEF. J Appl Physiol 2021;130:993-1000.
8. Strange G, Celermajer DS, Marwick T et al. The National Echocardiography Database Australia (NEDA): rationale and methodology. Am Heart J 2018;204:186-189.
9. Nagueh SF, Smiseth OA, Appleton CP et al. Recommendations for the evaluation of left ventricular diastolic function by echocardiography: an update from the American Society of Echocardiography and the European Association of Cardiovascular Imaging. Eur J Echocardiogr 2016;17:1321-1360.

10. Kang L, Chen W, Petrick NA, Gallas BD. Comparing two correlated C indices with right-censored survival outcome: a one-shot nonparametric approach. Stat Med 2015;34:685-703.

11. Nagueh SF. Left ventricular diastolic function: understanding pathophysiology, diagnosis, and prognosis with echocardiography. JACC Cardiovasc Imaging 2020;13:228-244.

12. Playford D, Strange G, Celermajer DS et al. Diastolic dysfunction and mortality in 436 360 men and women: the National Echo Database Australia (NEDA). European Heart Journal-Cardiovascular Imaging 2021;22:505-515.

13. Chung H, Lee BK, Min PK et al. Left ventricular filling pressure as assessed by the E/e' ratio is a determinant of atrial fibrillation recurrence after cardioversion. Yonsei Med J 2016;57:64-71.

14. Park J-H, Marwick TH. Use and limitations of E/e' to assess left ventricular filling pressure by echocardiography. J Cardiovasc Ultrasound 2011;19:169-173.

15. Bytyçi I, Haliti E, Berisha G, Tishukaj A, Shatri F, Bajraktari G. Left ventricular longitudinal systolic dysfunction is associated with right atrial dyssynchrony in heart failure with preserved ejection fraction. Rev Port Cardiol 2016;35:207-214.

16. Lopez-Candales A, Hernandez-Suarez DF, Menendez FL. Are measures of left ventricular longitudinal shortening affected by left atrial enlargement? Rev Port Cardiol 2018;9:1-6.

17. Bergenzaun L, Öhlin H, Gudmundsson P, Willenheimer R, Chew MS. Mitral annular plane systolic excursion (MAPSE) in shock: a valuable echocardiographic parameter in intensive care patients. Cardiovasc Ultrasound 2013;11:16.

18. Magdy G, Hamdy E, Elzawawy T, Ragab M. Value of mitral annular plane systolic excursion in the assessment of contractile reserve in patients with ischemic cardiomyopathy before cardiac revascularization. Indian Heart J 2018;70:373-378.

19. Matos J, Kronzon I, Panagopoulos G, Perk G. Mitral annular plane systolic excursion as a surrogate for left ventricular ejection fraction. J Am Soc Echocardiogr 2012;25:969-74.

20. Shah A, Nanjayya V, Ihle J. Mitral annular plane systolic excursion as a predictor of left ventricular ejection fraction in mechanically ventilated patients. Australas J Ultrasound Med 2019;22:138-142.

21. Al Saikhan L, Park C, Hardy R, Hughes A. Prognostic implications of left ventricular strain by speckle-tracking echocardiography in the general population: a meta-analysis. Vasc Health Risk Manag 2019;15:229.

22. Blume GG, Mcleod CJ, Barnes ME et al. Left atrial function: physiology, assessment, and clinical implications. Eur J Echocardiogr 2011;12:421-430.

23. Cheng S, Fernandes VR, Bluemke DA, McClelland RL, Kronmal RA, Lima JA. Age-related left ventricular remodeling and associated risk for cardiovascular outcomes: the Multi-Ethnic Study of Atherosclerosis. Circ Cardiovasc Imaging 2009;2:191-198.

24. Habibi M, Chahal H, Opdahl A et al. Association of CMR-measured LA function with heart failure development. JACC Cardiovasc Imaging 2014;7:570-579.

25. Medrano-Gracia P, Cowan BR, Ambale-Venkatesh B et al. Left ventricular shape variation in asymptomatic populations: the multi-ethnic study of atherosclerosis. J Cardiovasc Magn Reson 2014;16:56.

26. Rossi A, Gheorghiade M, Triposkiadis F, Solomon SD, Pieske B, Butler J. Left atrium in heart failure with preserved ejection fraction. Circ Heart Fail 2014;7:1042-1049.

27. Triposkiadis F, Pieske B, Butler J et al. Global left atrial failure in heart failure. Eur J Heart Fail 2016;18:1307-1320.

28. Pezel T, Venkatesh BA, De Vasconcellos HD et al. Left atrioventricular coupling index as a prognostic marker of cardiovascular events: the MESA study. Hypertension 2021;78:661-671.

29. Leung DY, Boyd A, Ng AA, Chi C, Thomas L. Echocardiographic evaluation of left atrial size and function: current understanding, pathophysiologic correlates, and prognostic implications. Am Heart J 2008;156:1056-1064.

30. Adams C, Busato G-M, Chu MWA. Left atrial reduction plasty: a novel technique. Ann Thorac Surg 2012;93:e77-e79.

31. Apostolakis E, Shuhaiber JH. The surgical management of giant left atrium. Eur J Cardiothorac Surg 2008;33:182-190.

32. Lessana A, Scorsin M, Scheublé C, Raffoul R, Rescigno G. Effective reduction of a giant left atrium by partial autotransplantation. Ann Thorac Surg 1999;67:1164-1165.

33. Sankar NM, Farnsworth AE. Left atrial reduction for chronic atrial fibrillation associated with mitral valve disease. Ann Thorac Surg 1998;66:254-256.

34. Sugiki H, Murashita T, Yasuda K, Doi H. Novel technique for volume reduction of giant left atrium: simple and effective “Spiral Resection” method. Ann Thorac Surg 2006;81:378-380.

35. Adalti S, Patel KG, Doshi CP et al. Concomitant left atrial reduction in rheumatic mitral valve disease with giant left atrium: our technique with midterm results. Innovations 2018;13:349-355.

36. Bogachev-Prokophiev AV, Ovcharov MA, Lavinykov SO et al. Surgical atrial fibrillation ablation with and without left atrium reduction for patients scheduled for

mitral valve surgery: a prospective randomised study. Heart Lung Circ 2021;30:922-931.

37. Choi W, Kim HJ, Park SY et al. The impact of left atrial reduction during surgical ablation of atrial fibrillation. Semin Thorac Cardiovasc Surg 2021 [E-pub ahead of print]; https://doi.org/10.1053/j.semtcvs.2021.03.008

38. Joshibayev S, Bolatbekov B. Early and long-term outcomes and quality of life after concomitant mitral valve surgery, left atrial size reduction, and radiofrequency surgical ablation of atrial fibrillation. Anatol J Cardiol 2016;16:797-803.

39. Kim JH, Jang WS, Kim J-B, Lee SJ. Impact of volume reduction in giant left atrium during surgical ablation of atrial fibrillation. J Thorac Dis 2019;11:84-92.

40. Marui A, Saji Y, Nishina T et al. Impact of left atrial volume reduction concomitant with atrial fibrillation surgery on left atrial geometry and mechanical function. J Thorac Cardiovasc Surg 2008;135:1297-1305.

41. Dhar S, Gupta A, Guru S, Padhy A. Early results of left atrial reduction plasty in patients undergoing mitral valve replacement. J Cardiovasc Med Surg 2019;5:131-136.

42. Janse MJ. Why does atrial fibrillation occur? Eur Heart J 1997;18:12-18.

43. Hunter RJ, Liu Y, Lu Y, Wang W, Schilling RJ. Left atrial wall stress distribution and Its relationship to electrophysiologic remodeling in persistent atrial fibrillation. Circ Arrhythm Electrophysiol 2012;5:351-360.

44. Nagarakanti R, Ezekowitz M. Diastolic dysfunction and atrial fibrillation. J Interv Card Electrophysiol 2008;22:111-118.

45. Rosenberg MA, Manning WJ. Diastolic dysfunction and risk of atrial fibrillation. Circulation 2012;126:2353-2362.

46. Playford D, Bordin E, Mohamad R, Stewart S, Strange G. Enhanced diagnosis of severe aortic stenosis using artificial intelligence: a proof-of-concept study of 530,871 echocardiograms. Cardiovascular Imaging 2020;13:1087-1090.

47. Strange G, Stewart S, Celermajer D et al. Mortality from Aortic Stenosis Across the Spectrum of Severity: Analysis of Big Data from the National Echo Database of Australia. Heart, Lung and Circulation 2018;27:S256.

48. Strange G, Stewart S, Celermajer D et al. Poor long-term survival in patients with moderate aortic stenosis. J Am Coll Cardiol 2019;74:1851-1863.

49. Strange G, Stewart S, Celermajer DS et al. Threshold of pulmonary hypertension associated with increased mortality. J Am Coll Cardiol 2019;73:2660-2672.

Figure legends

Figure 1. Schematic of hydraulic forces in the left atrium and ventricle. (A) During diastole, a hydraulic force (HF) is generated in the left atrium and ventricle perpendicular to the respective chamber walls., represented by the grey arrows in the left atrium and the left ventricle, respectively. These forces can be resolved into their longitudinal ($HF_{longitudinal}$) and radial (HF_{radial}) components as indicated by the solid black and dashed arrows, respectively. The radial component is counteracted by the pericardium and surrounding tissues whilst the longitudinal component represents the hydraulic force that contributes to the longitudinal motion of the atrioventricular plane during diastole. **(B)** Due to the larger surface area of the LV compared to the LA in a healthy individual, the LV generates a greater hydraulic force in the longitudinal direction, represented by the two additional red arrows. Abbreviations: HF = hydraulic force; $HF_{longitudinal}$ = hydraulic force longitudinal component; HF_{radial} = hydraulic force radial component; LA = left atrium; LV = left ventricle. Figure adapted from (4).

Figure 2. Patient inclusion flowchart. This flowchart describes the inclusion and exclusion criteria of the study cohort.

Figure 3. Measurement of atrioventricular area difference in transthoracic echocardiography. In routine echocardiography, atrioventricular area difference can be calculated as the difference between left ventricular end-diastolic short-axis cross-sectional area and left atrial end-systolic short-axis cross-sectional area. Short-axis cross-sectional area is calculated by circular approximation using left ventricular end-diastolic diameter and left atrial end-systolic diameter measured in a parasternal view. The atrial short-axis and ventricular short-axis areas represent the surface areas which contribute to the generation of

hydraulic forces which contribute to the diastolic longitudinal motion of the atrioventricular plane, facilitating left ventricular filling. Abbreviations: Ao = aorta; LA = left atrium; LV = left ventricle; RV = right ventricle.

Figure 4. Survival curves for atrioventricular area difference, E/e' ratio and diastolic function grading. Kaplan-Meier survival curves for (A) AVAD, (B) E/e' and (C) diastolic function grading. Each curve is stratified by tertiles, with the respective risk table below each panel. Abbreviations: AVAD = atrioventricular area difference.

Text Tables

Table 1. Baseline characteristics of study cohort.

Variable	Above median AVAD n=5,883 (50%)	Below median AVAD n=5,851 (50%)	Total Population n=11,734 (100%)
Patient Characteristics			
Gender, males (%)	3,150 (54)	2,336 (40)	5,486 (47)
Age, years	54 [40-67]	67 [55-76]	61 [47-73]
Height, cm	170 [163-178]	165 [158-173]	168 [160-175]
Body Weight, kg	81 [70-95]	78 [66-91]	80 [67-93]
BMI, kg/m^2	27.6 [24.2-32.0]	27.9 [24.5-32.1]	27.8 [24.3-32.0]
BSA, m^2	2.0 [1.8-2.1]	1.9 [1.7-2.1]	1.9 [1.8-2.1]
Heart Rate, beats per minute	70 [65-78]	65 [65-75]	65 [65-75]
Systolic blood pressure, mmHg	120 [105-126]	129 [124-130]	124 [111-129]
Diastolic blood pressure, mmHg	70 [70-80]	78 [72-80]	74 [70-81]
Echocardiographic data			
E/A ratio	1.1 [0.8-1.4]	0.9 [0.7-1.2]	1.0 [0.8-1.3]
E wave velocity, cm/s	78 [64-93]	76 [63-90]	77 [63-92]
A wave velocity, cm/s	72 [59-88]	83 [68-100]	78 [63-94]
E/ e' ratio	9.5 [7.7-11.9]	11.1 [8.9-14.0]	10.2 [8.2-12.9]
Septal e', cm/s	8.0 [6.4-9.9]	6.6 [5.4-8.2]	7.2 [5.8-9.1]
LAVI, ml/m^2	31 [25-37]	33 [26-41]	32 [26-39]
LVMI, g/m^2	79 [67-94]	75 [63-91]	77 [65-92]
IVS diastolic wall thickness, mm	9.4 [8.1-10.9]	10.4 [9.1-12.0]	10.0 [8.7-11.2]
LVEF, %	63 [59-67]	65 [60-69]	64 [60-68]
TR peak velocity, m/s	2.4 [2.1-2.6]	2.5 [2.2-2.7]	2.4 [2.2-2.7]
LV EDD, cm	4.8 [4.5-5.1]	4.2 [3.9-4.6]	4.5 [4.2-4.9]
LA ESD, cm	3.3 [3.0-3.7]	3.7 [3.3-4.1]	3.5 [3.1-3.9]
AVAD, cm^2	9.0 [7.6-10.9]	3.9 [1.9-5.3]	6.4 [3.9-9.0]

Data are reported as median [interquartile range]. Body surface area was calculated using the Mosteller formula. When comparing patients above and below the median AVAD of the population, all measures of diastolic function were consistent with better diastolic function in patients with an AVAD above the median ($p<0.001$ for all). Abbreviations: AVAD = atrioventricular area difference; BMI = body mass index; BP = blood pressure; BSA = body surface area; E/e' ratio = E to septal e' velocity ratio; IVS Diastolic Wall Thickness = interventricular septum diastolic wall thickness; LA ESD = left atrial end-systolic diameter; LAVI = left atrial volume index; LV EDD = left ventricular end-diastolic diameter; LVEF = left ventricular ejection fraction; LVMI = left ventricular mass index; Peak TR velocity = peak tricuspid regurgitation velocity.

Table 2. Transthoracic echocardiographic measures of diastolic function and their association with atrioventricular area difference.

	Univariable		**Multivariable (n=428)**			
Measure	R^2	p value	Standardised β	p value	Global Adjusted R^2	p value
E/e' ratio (n=11,734)	0.05	<0.001	-0.28	<0.001	0.15	<0.001
e' velocity, cm/s (n=11,279)	0.06	<0.001	<0.01	0.99		
LA volume index, cm^3/m^2 (n=1,101)	0.02	<0.001	-0.10	0.03		
TR peak velocity, cm/s (n=6,240)	0.03	<0.001	-0.03	0.53		
LVEF, % (n=11,734)	0.02	<0.001	-0.19	<0.001		

R^2 values represent the proportion of the variation in AVAD explained by the variables, whilst standardised beta coefficients express the strength of the effect of each independent variable on AVAD. The number of patients included in each respective univariable and multivariable analysis are included in brackets. Abbreviations: AVAD = atrioventricular area difference; e' velocity = septal e' velocity; E/e' = E to septal e' velocity ratio; LAVI = left atrial volume index; LVEF = left ventricular ejection fraction; Peak TR velocity = peak tricuspid regurgitation velocity. TR peak velocity = tricuspid regurgitation peak velocity; LVEF = left ventricular ejection fraction, LA ESD = left atrial end systolic diameter, LV EDD = left ventricular end diastolic diameter.

Table 3. Atrioventricular area difference and diastolic function grading as predictors of 5-year all-cause mortality.

LVEF ≥ 50% n=11,734, 1213 events 3.9 [2.4-5.0] years follow up	**Univariable Model**				**Multivariable Model**			
Variable	Chi-Square	HR [95% CI]	p value	C-statistic [95% CI]	Chi-Square	HR [95% CI]	p value	C-statistic [95% CI]
Diastolic Dysfunction	294	3.02 [2.66-3.42]	<0.001	0.607 [0.592–0.623]	213	2.66 [2.33-3.03]	<0.001	0.645 [0.629–0.662]
Indeterminate Diastolic Function	19	1.44 [1.22-1.69]	<0.001		14	1.37 [1.17-1.62]	<0.001	
AVAD	122	1.37 [1.29-1.44]	<0.001	0.591 [0.574–0.608]	50	1.23 [1.16-1.31]	<0.001	

Univariable and multivariable cox regression was used to evaluate AVAD and diastolic function grading as predictors of 5-year all-cause mortality. Diastolic function grading was determined using the 2016 ASE/EACVI guidelines. Wald's chi-square values were used to compare the strength of association of different variables within regression models. The hazard ratios for diastolic dysfunction and indeterminate diastolic function are reported with normal diastolic function as a reference level. The hazard ratio for AVAD is scaled by standard deviation decrement. The C-statistic of univariable and multivariable models was compared to evaluate differences in model discrimination. Abbreviations: ASE = American Society of Echocardiography; AVAD = atrioventricular area difference; CI = confidence interval; EACVI = European Association of Cardiovascular Imaging; HR = hazard ratio; LVEF = left ventricular ejection fraction.

Table 4. Atrioventricular area difference and E/e' as predictors of 5-year all-cause mortality.

LVEF ≥ 50% n=11,734, 1213 events 3.9 [2.4-5.0] years follow up	**Univariable Model**				**Multivariable Model**			
Variable	Chi-Square	HR [95% CI]	p value	C-statistic [95% CI]	Chi-Square	HR [95% CI]	p value	C-statistic [95% CI]
E/e' ratio	272	1.43 [1.37-1.49]	<0.001	0.621 [0.604–0.637]	184	1.36 [1.30-1.42]	<0.001	0.639 [0.623–0.655]
AVAD	122	1.37 [1.29-1.44]	<0.001	0.591 [0.574–0.608]	55	1.25 [1.18-1.33]	<0.001	

Univariable and multivariable cox regression was used to evaluate AVAD and E/e' as predictors of 5-year all-cause mortality. Wald's chi-square values were used to compare the strength of association of different variables within regression models. The hazard ratio for E/e' ratio is scaled by standard deviation increment, and AVAD by standard deviation decrement. The C-statistic of univariable and multivariable models was compared to evaluate differences in model discrimination. Abbreviations: AVAD = atrioventricular area difference; CI = confidence interval; E/e' = E to septal e' velocity ratio; HR = hazard ratio; LVEF = left ventricular ejection fraction.

Figures

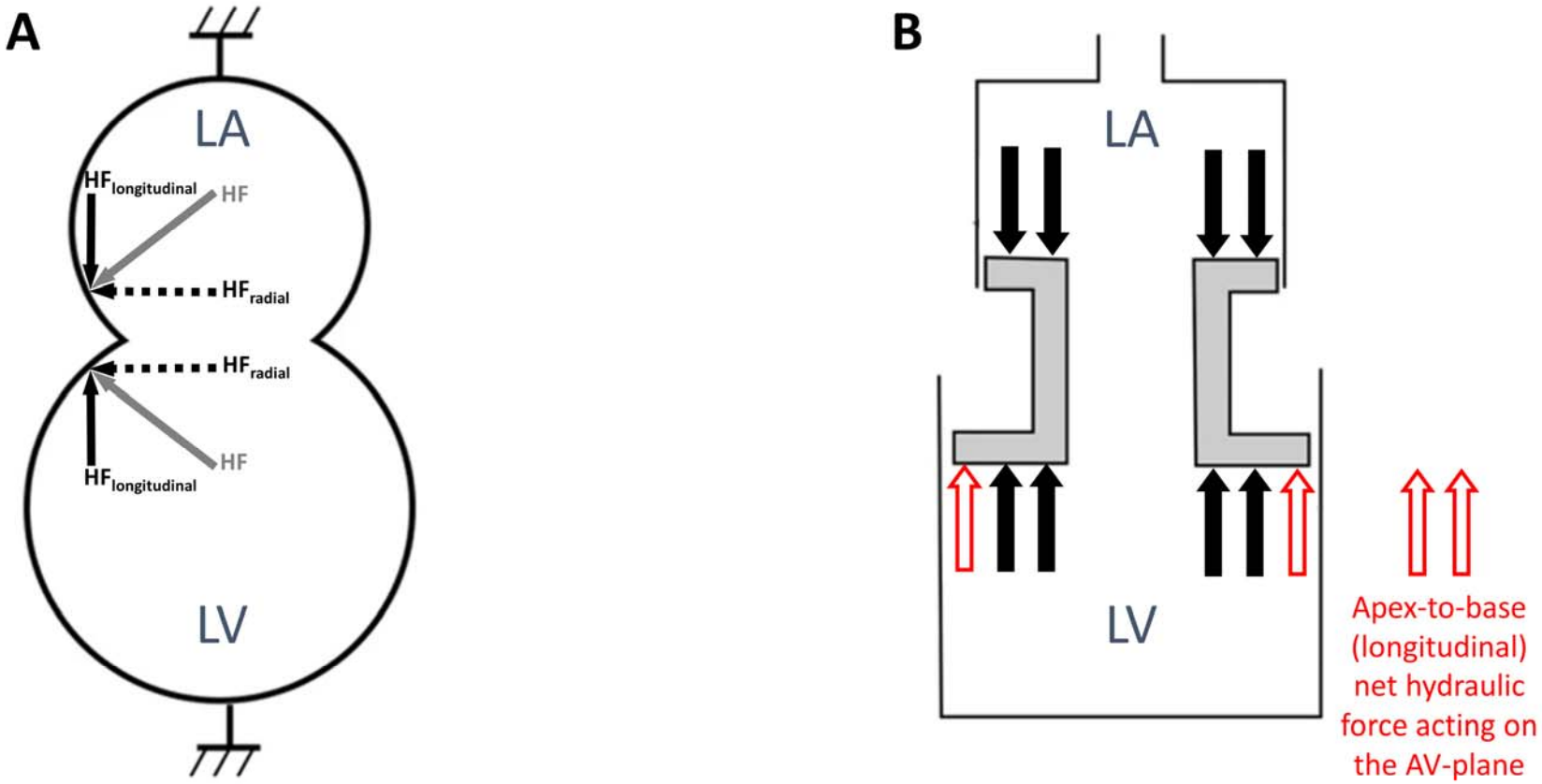
A
LA
HF longitudinal
HF
HF radial
HF radial
HF
HF longitudinal
LV
B
LA
LV
Apex-to-base (longitudinal) net hydraulic force acting on the AV-plane

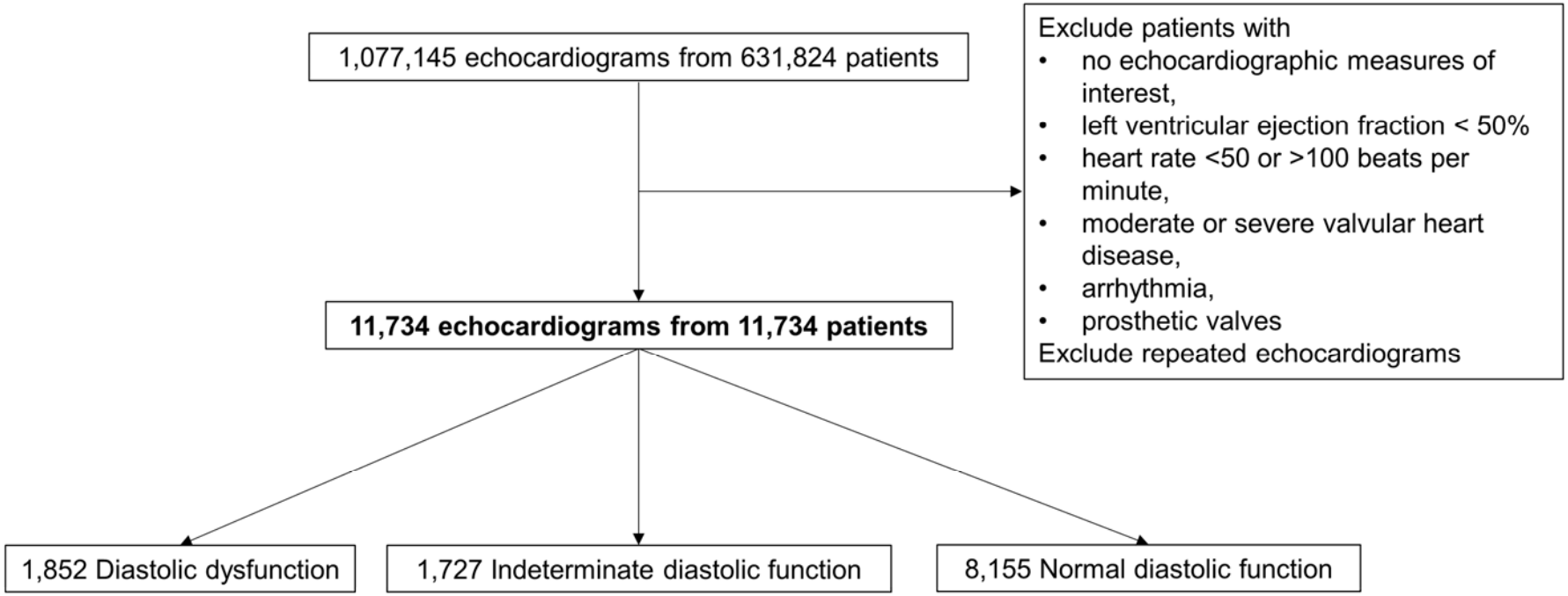
1,077,145 echocardiograms from 631,824 patients
Exclude patients with
• no echocardiographic measures of interest,
• left ventricular ejection fraction < 50%
• heart rate <50 or >100 beats per minute,
• moderate or severe valvular heart disease,
• arrhythmia,
• prosthetic valves
Exclude repeated echocardiograms
11,734 echocardiograms from 11,734 patients
1,852 Diastolic dysfunction
1,727 Indeterminate diastolic function
8,155 Normal diastolic function

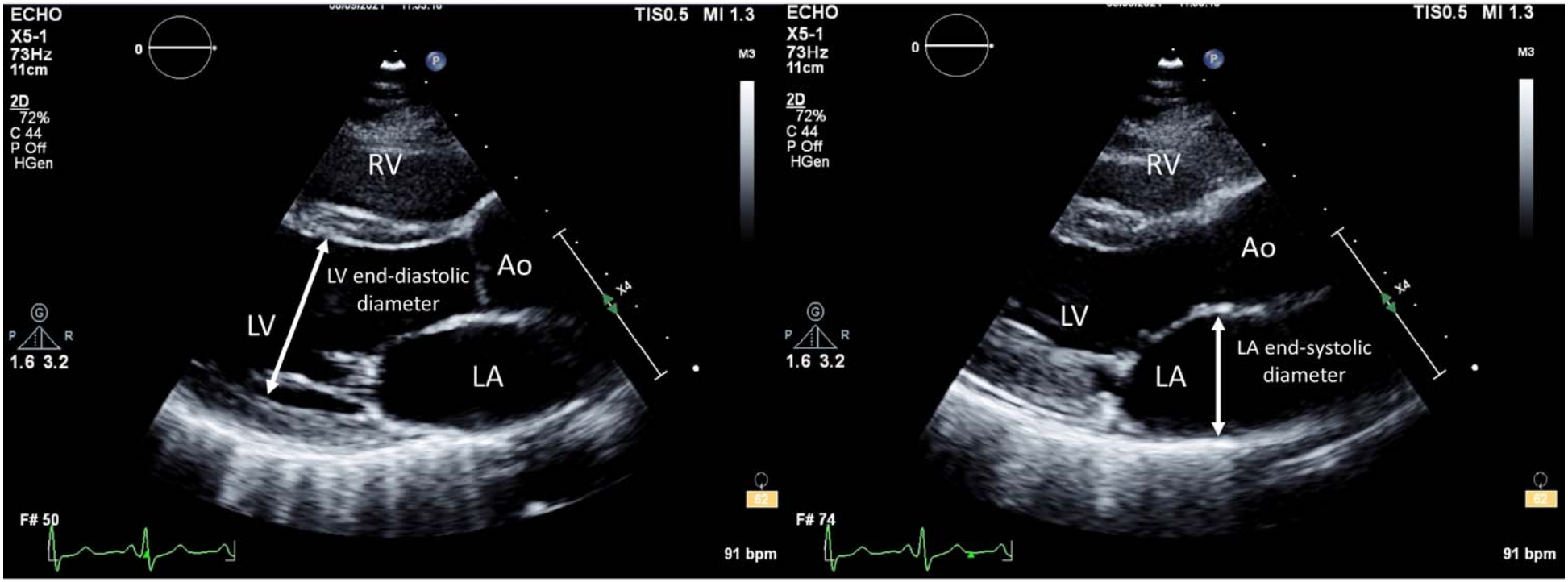
ECHO
X5-1
73Hz
11cm
2D
72%
C 44
P Off
HGen
TIS0.5 MI 1.3
M3
RV
Ao
LV
LA
LV end-diastolic diameter
1.6 3.2
F# 50
91 bpm
ECHO
X5-1
73Hz
11cm
2D
72%
C 44
P Off
HGen
TIS0.5 MI 1.3
M3
RV
Ao
LV
LA
LA end-systolic diameter
1.6 3.2
F# 74
91 bpm

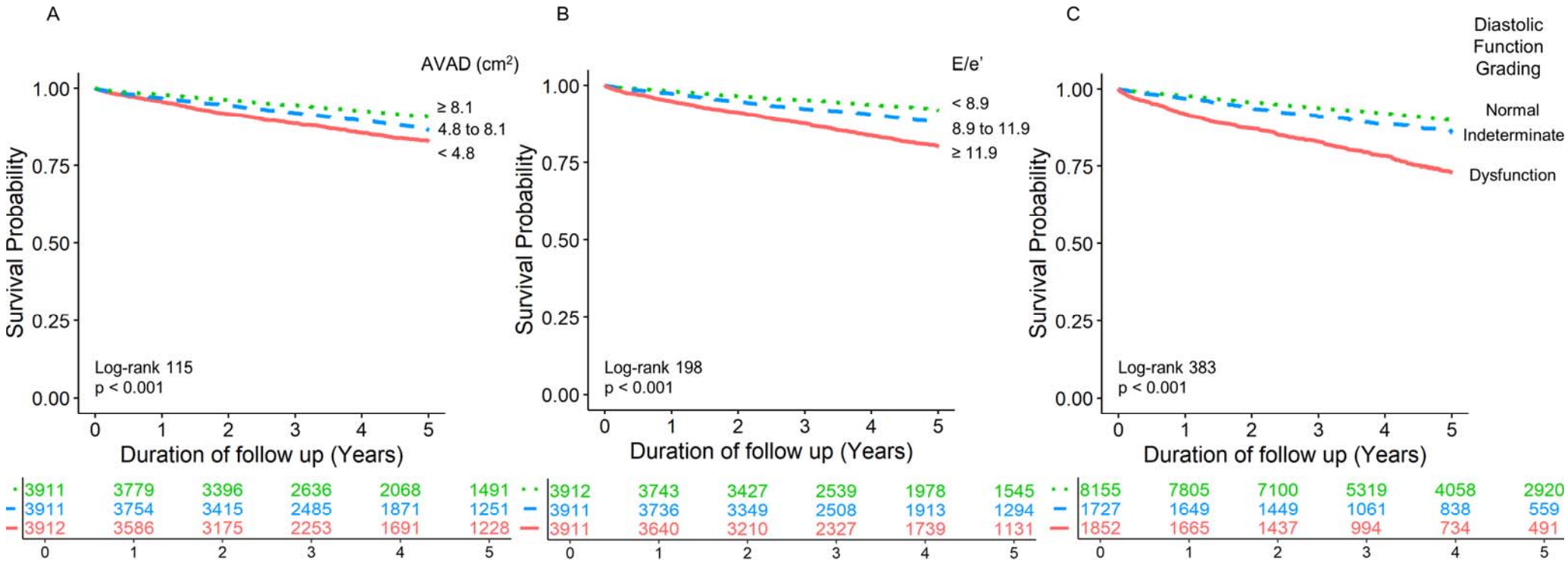
A
AVAD (cm²)
≥ 8.1
4.8 to 8.1
< 4.8
Survival Probability
1.00
0.75
0.50
0.25
0.00
Log-rank 115
p < 0.001
0 1 2 3 4 5
Duration of follow up (Years)
3911 3779 3396 2636 2068 1491
3911 3754 3415 2485 1871 1251
3912 3586 3175 2253 1691 1228
0 1 2 3 4 5
B
E/e'
< 8.9
8.9 to 11.9
≥ 11.9
Survival Probability
1.00
0.75
0.50
0.25
0.00
Log-rank 198
p < 0.001
0 1 2 3 4 5
Duration of follow up (Years)
3912 3743 3427 2539 1978 1545
3911 3736 3349 2508 1913 1294
3911 3640 3210 2327 1739 1131
0 1 2 3 4 5
C
Diastolic Function Grading
Normal
Indeterminate
Dysfunction
Survival Probability
1.00
0.75
0.50
0.25
0.00
Log-rank 383
p < 0.001
0 1 2 3 4 5
Duration of follow up (Years)
8155 7805 7100 5319 4058 2920
1727 1649 1449 1061 838 559
1852 1665 1437 994 734 491
0 1 2 3 4 5

Supplemental Table 1. Atrioventricular area difference and diastolic function grading as predictors of 5-year cardiovascular mortality.

LVEF ≥ 50% n=11,734, 173 events 3.9 [2.4-5.0] years follow up	**Univariable Model**				**Multivariable Model**			
Variable	Chi-Square	HR [95% CI]	p value	C-statistic [95% CI]	Chi-Square	HR [95% CI]	p value	C-statistic [95% CI]
Diastolic Dysfunction	113	5.87 [4.24-8.13]	<0.001	0.690 [0.650–0.730]	85	4.95 [3.53-6.95]	<0.001	0.721 [0.682–0.761]
Indeterminate Diastolic Function	9	1.97 [1.26-3.08]	0.003		7	1.85 [1.18-2.89]	0.007	
AVAD	43	1.57 [1.37-1.80]	<0.001	0.619 [0.576–0.661]	14	1.33 [1.14-1.54]	<0.001	

Univariable and multivariable cox regression was used to evaluate AVAD and diastolic function grading as predictors of 5-year cardiovascular mortality. Diastolic function grading was determined using the 2016 ASE/EACVI guidelines. Wald's chi-square values were used to compare the strength of association of different variables within regression models. The hazard ratios for diastolic dysfunction and indeterminate diastolic function are reported with normal diastolic function as a reference level. The hazard ratio for AVAD is scaled by standard deviation decrement. The C-statistic of univariable and multivariable models was compared to evaluate differences in model discrimination. Abbreviations: ASE = American Society of Echocardiography; AVAD = atrioventricular area difference; CI = confidence interval; EACVI = European Association of Cardiovascular Imaging; HR = hazard ratio; LVEF = left ventricular ejection fraction.

Supplemental Table 2. Atrioventricular area difference and E/e' as predictors of 5-year cardiovascular mortality.

LVEF ≥ 50% n=11,734, 173 events 3.9 [2.4-5.0] years follow up	**Univariable Model**				**Multivariable Model**			
Variable	Chi-Square	HR [95% CI]	p value	C-statistic [95% CI]	Chi-Square	HR [95% CI]	p value	C-statistic [95% CI]
E/e' ratio	81	1.57 [1.42-1.73]	<0.001	0.664 [0.621–0.707]	51	1.47 [1.32-1.63]	<0.001	0.686 [0.643–0.729]
AVAD	43	1.57 [1.37-1.80]	<0.001	0.619 [0.576–0.661]	21	1.41 [1.22-1.64]	<0.001	

Univariable and multivariable cox regression was used to evaluate AVAD and E/e' as predictors of 5-year cardiovascular mortality. Wald's chi-square values were used to compare the strength of association of different variables within regression models. The hazard ratio for E/e' ratio is scaled by standard deviation increment, and AVAD by standard deviation decrement. The C-statistic of univariable and multivariable models was compared to evaluate differences in model discrimination. Abbreviations: AVAD = atrioventricular area difference; CI = confidence interval; E/e' = E to septal e' velocity ratio; HR = hazard ratio; LVEF = left ventricular ejection fraction.

Supplemental Table 3. Atrioventricular area difference and diastolic function grading as predictors of 5-year all-cause mortality in left ventricular ejection fraction subgroups

LVEF ≥ 50% n=533, 82 events 4.3 [2.6-5.6] years follow up	**Univariable Model**				**Multivariable Model**			
Variable	Chi-Square	HR [95% CI]	p value	C-statistic [95% CI]	Chi-Square	HR [95% CI]	p value	C-statistic [95% CI]
Diastolic Dysfunction	7	1.93 [1.19-3.13]	0.007	0.576 [0.518–0.634]	3	1.58 [0.94-2.63]	0.08	0.625 [0.563–0.687]
Indeterminate Diastolic Function	<1	0.79 [0.41-1.53]	0.492		1	0.71 [0.37-1.39]	0.32	
AVAD	10	1.45 [1.16-1.81]	0.001	0.611 [0.548–0.675]	7	1.37 [1.08-1.74]	0.01	
60% ≤ LVEF < 75% n=8,628, 840 events 3.9 [2.5-5.4] yrs follow up	**Univariable Model**				**Multivariable Model**			
Variable	Chi-Square	HR [95% CI]	p value	C-statistic	Chi-Square	HR [95% CI]	p value	C-statistic
Diastolic Dysfunction	236	3.26 [2.80-3.79]	<0.001	0.613 [0.595–0.631]	167	2.84 [2.42-3.32]	<0.001	0.653 [0.634–0.672]
Indeterminate Diastolic Function	15	1.50 [1.22-1.83]	<0.001		12	1.43 [1.17-1.74]	<0.001	
AVAD	95	1.40 [1.31-1.50]	<0.001	0.596 [0.576–0.616]	34	1.24 [1.15-1.33]	<0.001	
50% ≤ EF < 60% n=2,573, 291 events 3.6 [2.4-5.3] yrs follow up	**Univariable Model**				**Multivariable Model**			
Variable	Chi-Square	HR [95% CI]	p value	C-statistic	Chi-Square	HR [95% CI]	p value	C-statistic
Diastolic Dysfunction	50	2.59 [1.99-3.38]	<0.001	0.600 [0.568–0.632]	39	2.37 [1.81-3.10]	<0.001	0.631 [0.597–0.665]
Indeterminate Diastolic Function	4	1.40	0.034		3	1.33	0.071	

		[1.03-1.90]				[0.98-1.81]		
AVAD	22	1.29 [1.16-1.43]	<0.001	0.575 [0.542–0.609]	13	1.21 [1.09-1.35]	<0.001	

Survival analyses were repeated in LVEF subgroups of 50% ≤ LVEF < 60%, 60% ≤ LVEF < 75% and 75% ≤ LVEF to account for the influence of mitral annular plane systolic excursion on our measurement of AVAD. A similar trend in results were observed in all groups. Diastolic function grading was determined using the 2016 ASE/EACVI guidelines. Wald's chi-square values were used to compare the strength of association of different variables within regression models. The hazard ratios for diastolic dysfunction and indeterminate diastolic function are reported with normal diastolic function as a reference level. The hazard ratio for AVAD is scaled by standard deviation decrement. The C-statistic of univariable and multivariable models was compared to evaluate differences in model discrimination. Abbreviations: ASE = American Society of Echocardiography; AVAD = atrioventricular area difference; CI = confidence interval; EACVI = European Association of Cardiovascular Imaging; HR = hazard ratio; LVEF = left ventricular ejection fraction.

Supplemental Table 4. Atrioventricular area difference and E/e' as predictors of 5-year all-cause mortality in left ventricular ejection fraction subgroups

LVEF ≥ 50% n=533, 82 events 4.3 [2.6-5.6] years follow up	**Univariable Model**				**Multivariable Model**			
Variable	Chi-Square	HR [95% CI]	p value	C-statistic [95% CI]	Chi-Square	HR [95% CI]	p value	C-statistic [95% CI]
E/e' ratio	8	1.31 [1.09-1.57]	0.004	0.571 [0.503–0.638]	4	1.21 [1.01-1.46]	0.04	0.618 [0.553–0.684]
AVAD	10	1.45 [1.16-1.81]	0.001	0.611 [0.548–0.675]	6	1.36 [1.07-1.72]	0.01	
60% ≤ LVEF < 75% n=8,628, 840 events 3.9 [2.5-5.4] years follow up	**Univariable Model**				**Multivariable Model**			
Variable	Chi-Square	HR [95% CI]	p value	C-statistic	Chi-Square	HR [95% CI]	p value	C-statistic
E/e' ratio	219	1.49 [1.41-1.57]	<0.001	0.630 [0.611–0.649]	144	1.41 [1.33-1.49]	<0.001	0.648 [0.629–0.666]
AVAD	95	1.40 [1.31-1.50]	<0.001	0.596 [0.576–0.616]	39	1.26 [1.17-1.36]	<0.001	
50% ≤ EF < 60% n=573, 291 events 3.6 [2.4-5.3] years follow up	**Univariable Model**				**Multivariable Model**			
Variable	Chi-Square	HR [95% CI]	p value	C-statistic	Chi-Square	HR [95% CI]	p value	C-statistic
E/e' ratio	50	1.32 [1.22-1.42]	<0.001	0.610 [0.577–0.644]	36	1.28 [1.18-1.38]	<0.001	0.629 [0.596–0.662]
AVAD	22	1.29 [1.16-1.43]	<0.001	0.575 [0.542–0.609]	11	1.1 [1.08-1.35]	<0.001	

Survival analyses were repeated in LVEF subgroups of 50% ≤ LVEF < 60%, 60% ≤ LVEF < 75% and 75% ≤ LVEF to account for the influence of mitral annular plane systolic excursion on our measurement of AVAD. A similar trend in results were observed in all groups. Wald's chi-square values were used to compare the strength of association of different variables within regression models. The hazard ratio for E/e' ratio is scaled by standard deviation increment, and AVAD by standard deviation decrement. The C-statistic of univariable and multivariable models was compared to evaluate differences in model discrimination. Abbreviations: AVAD = atrioventricular area difference; CI = confidence interval; C-statistic = concordance statistic; E/e' = E to septal e' velocity ratio; HR = hazard ratio; LVEF = left ventricular ejection fraction.

Supplemental Table 5. Univariable association between left ventricular ejection fraction and atrioventricular area difference in left ventricular ejection fraction subgroups

LVEF group	R^2	p value
LVEF ≥ 75%	0.02	<0.001
60% ≤ LVEF < 75%	0.01	<0.001
50% ≤ LVEF < 60%	0.01	<0.001
LVEF ≤ 50%	0.02	<0.001

Univariable linear regression was used to determine the association between AVAD and LVEF. Patients with a similar LVEF are known to have a comparable mitral annular plane systolic excursion, meaning the movement of the mitral annular plane does not meaningfully affect differences in AVAD between patients with a similar LVEF. Abbreviations: AVAD = atrioventricular area difference; LVEF = left ventricular ejection fraction.

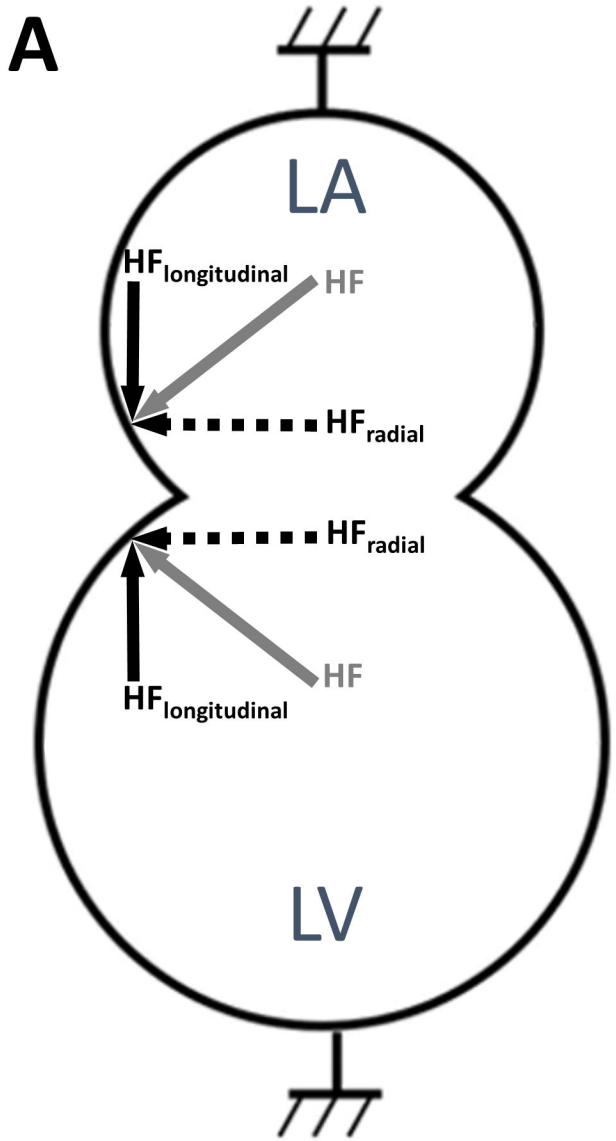
A
LA
HF longitudinal
HF
HF radial
HF radial
HF
HF longitudinal
LV

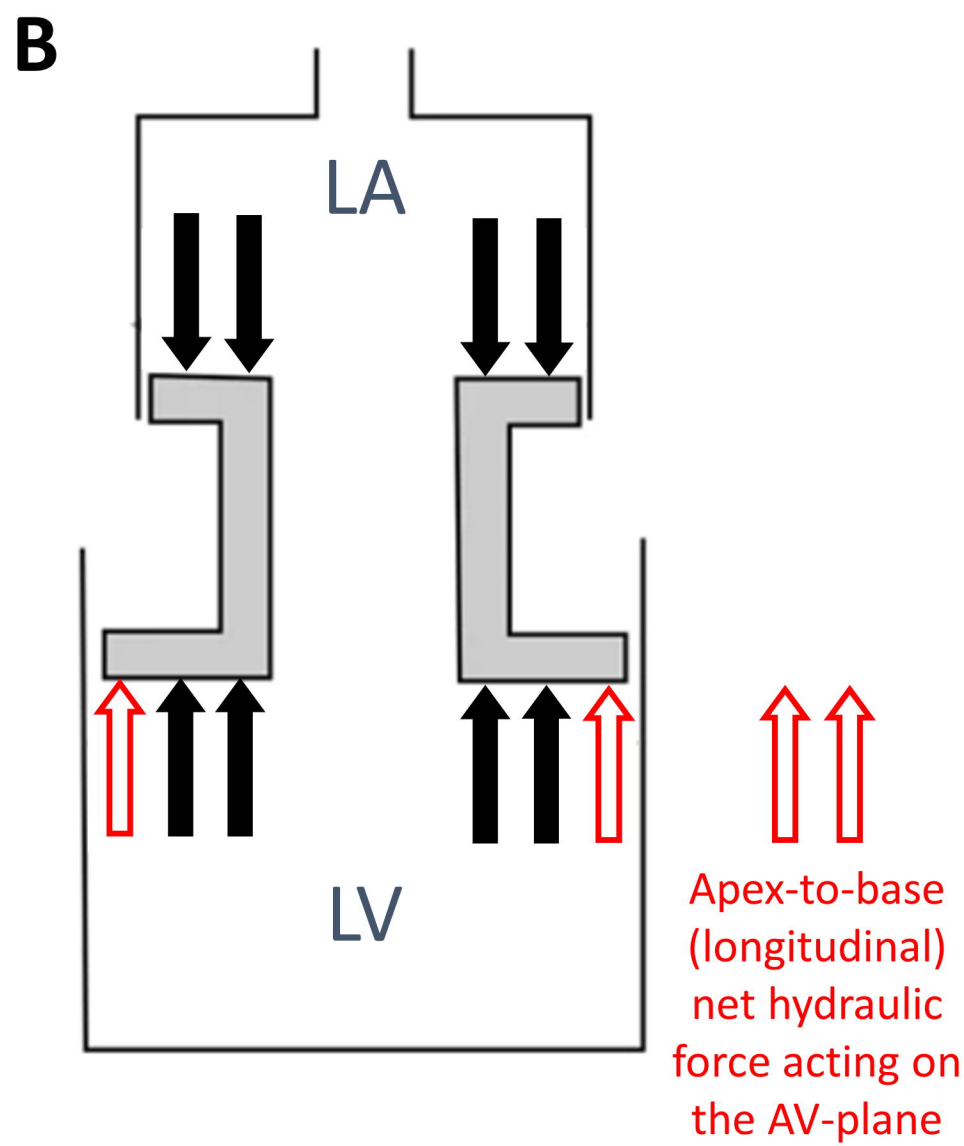
B
LA
LV
Apex-to-base (longitudinal) net hydraulic force acting on the AV-plane

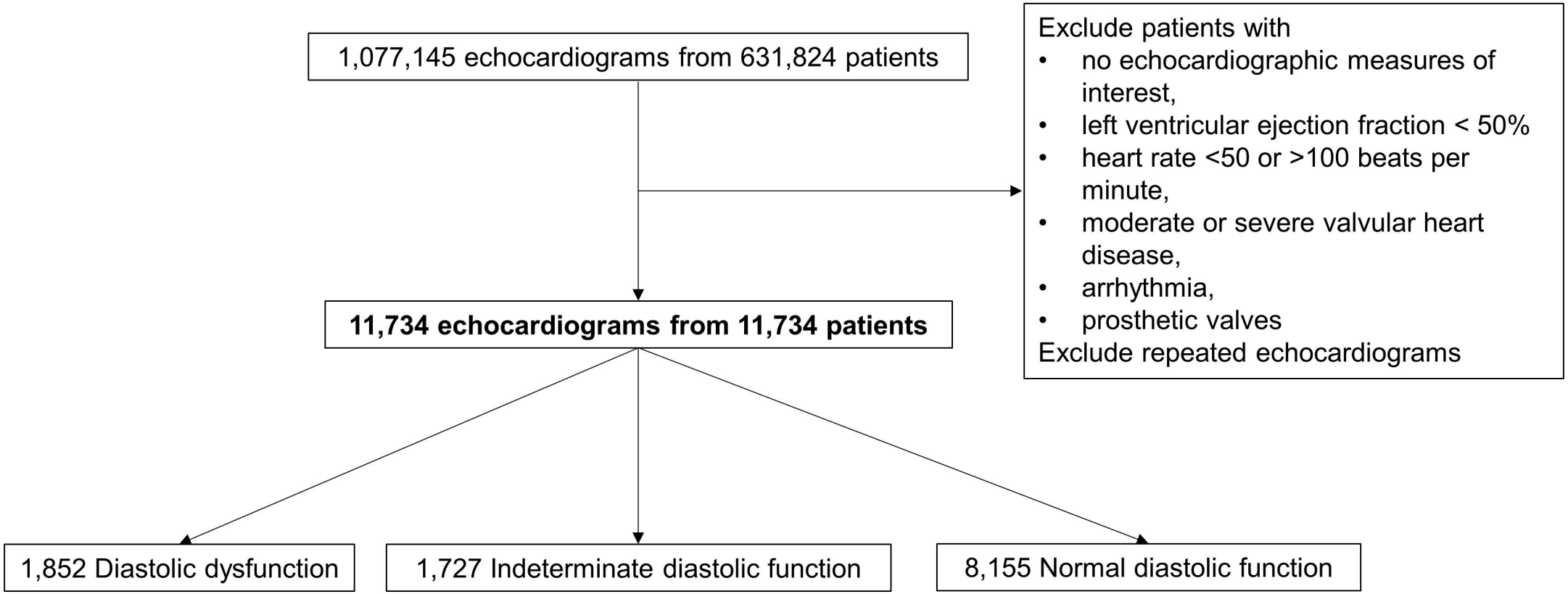
1,077,145 echocardiograms from 631,824 patients
Exclude patients with
• no echocardiographic measures of interest,
• left ventricular ejection fraction < 50%
• heart rate <50 or >100 beats per minute,
• moderate or severe valvular heart disease,
• arrhythmia,
• prosthetic valves
Exclude repeated echocardiograms
11,734 echocardiograms from 11,734 patients
1,852 Diastolic dysfunction
1,727 Indeterminate diastolic function
8,155 Normal diastolic function

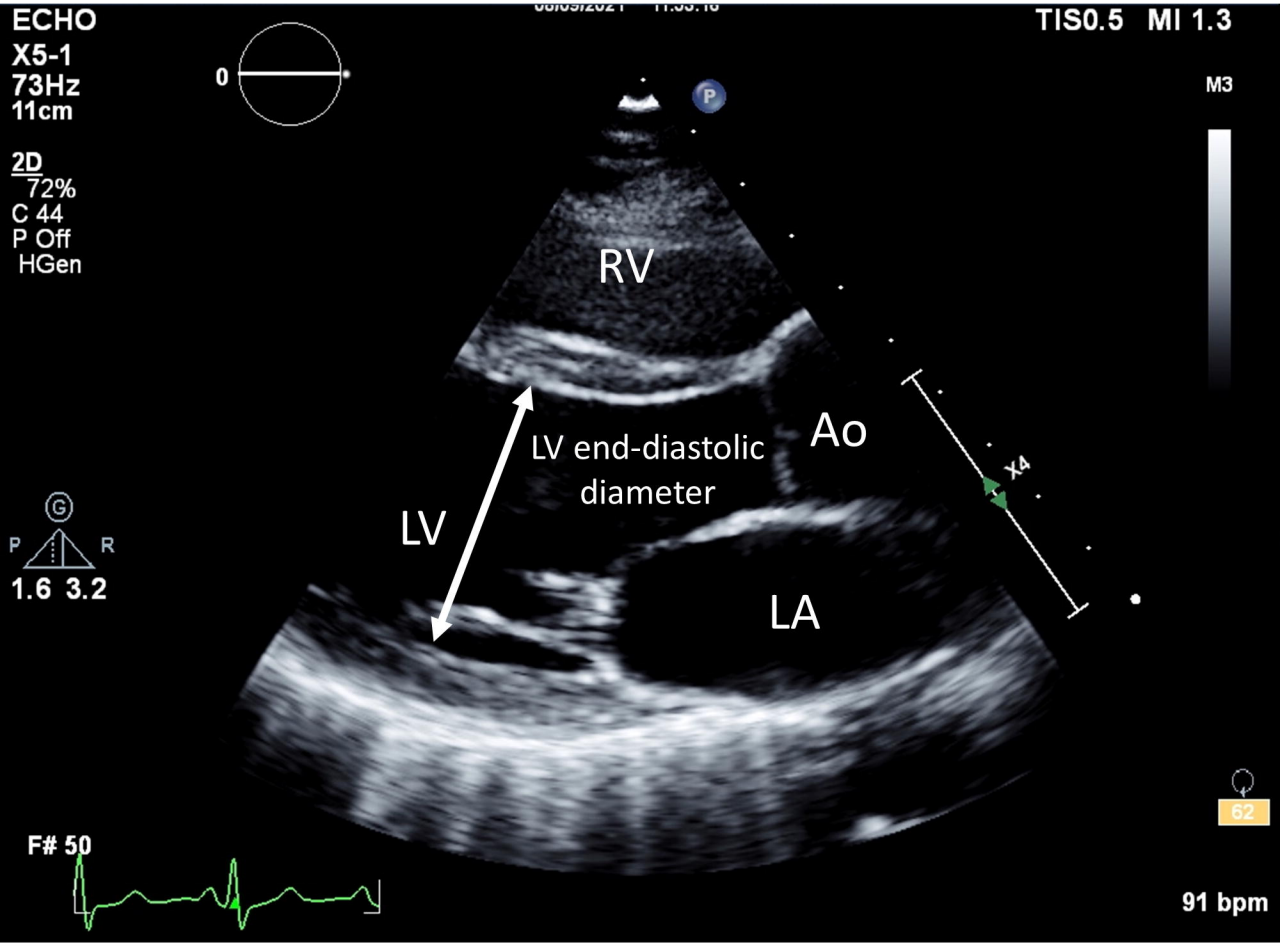
ECHO
X5-1
73Hz
11cm
2D
72%
C 44
P Off
HGen
TIS0.5 MI 1.3
M3
RV
Ao
LV
LA
LV end-diastolic diameter
X4
1.6 3.2
F# 50
91 bpm

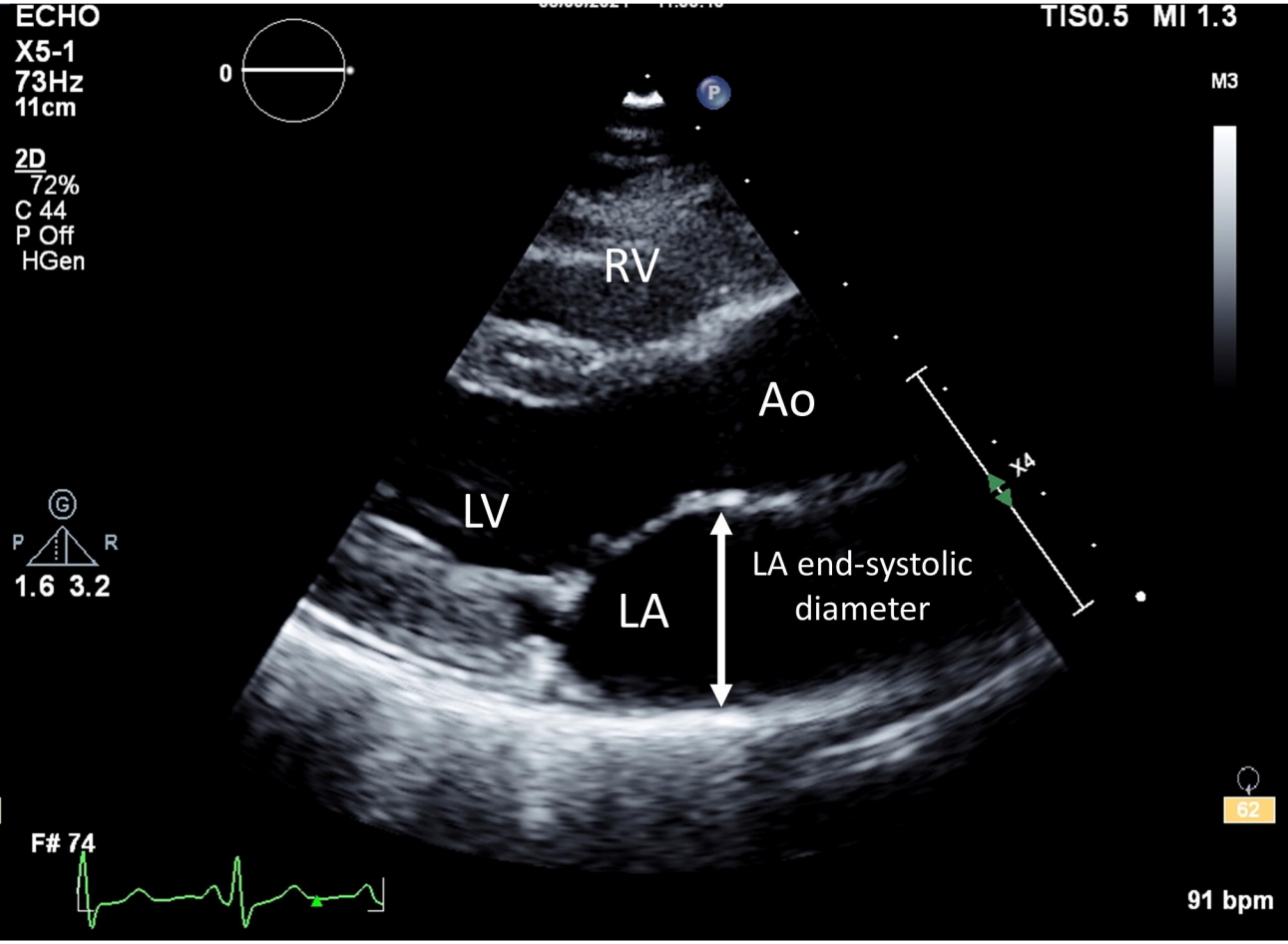
ECHO
X5-1
73Hz
11cm
2D
72%
C 44
P Off
HGen
TIS0.5 MI 1.3
M3
RV
Ao
LV
LA
LA end-systolic diameter
X4
1.6 3.2
F# 74
91 bpm

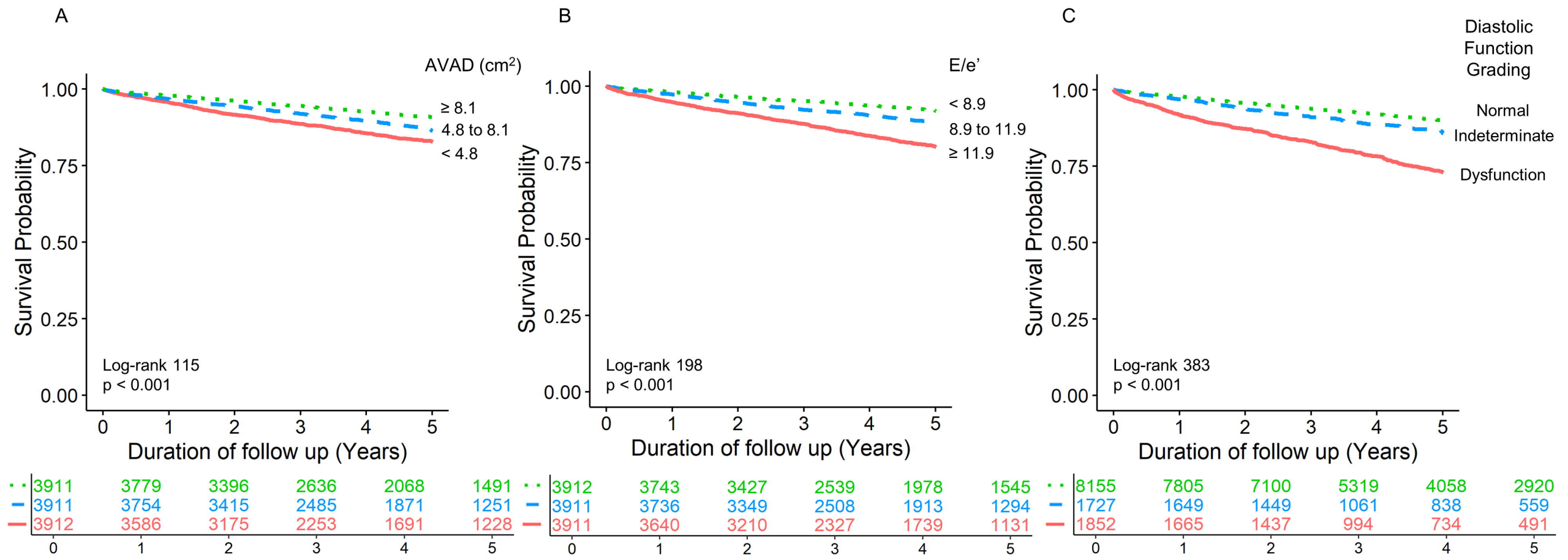
A
AVAD (cm²)
≥ 8.1
4.8 to 8.1
< 4.8
Survival Probability
1.00
0.75
0.50
0.25
0.00
Log-rank 115
p < 0.001
0 1 2 3 4 5
Duration of follow up (Years)
3911 3779 3396 2636 2068 1491
3911 3754 3415 2485 1871 1251
3912 3586 3175 2253 1691 1228
0 1 2 3 4 5
B
E/e'
< 8.9
8.9 to 11.9
≥ 11.9
Survival Probability
1.00
0.75
0.50
0.25
0.00
Log-rank 198
p < 0.001
0 1 2 3 4 5
Duration of follow up (Years)
3912 3743 3427 2539 1978 1545
3911 3736 3349 2508 1913 1294
3911 3640 3210 2327 1739 1131
0 1 2 3 4 5
C
Diastolic Function Grading
Normal
Indeterminate
Dysfunction
Survival Probability
1.00
0.75
0.50
0.25
0.00
Log-rank 383
p < 0.001
0 1 2 3 4 5
Duration of follow up (Years)
8155 7805 7100 5319 4058 2920
1727 1649 1449 1061 838 559
1852 1665 1437 994 734 491
0 1 2 3 4 5