Threshold analyses on rates of testing, transmission, and contact for COVID-19 control in a university setting

Xinmeng Zhao[1], Hanisha Tatapudi[1], George Corey[2], and *Chaitra Gopalappa[1]

[1]Department of Mechanical and Industrial Engineering, University of Massachusetts Amherst, MA, USA

[2] University Health Services, University of Massachusetts Amherst, MA, USA

*Corresponding author:

e-mail: chaitrag@umass.edu

[1] These authors contributed equally to this work

Abstract

We simulated epidemic projections of a potential COVID-19 outbreak in a residential university population in the United States under varying combinations of asymptomatic tests (5% to 33% per day), transmission rates (2.5% to 14%), and contact rates (1 to 25), to identify the contact rate threshold that, if exceeded, would lead to exponential growth in infections. Using this, we extracted contact rate thresholds among non-essential workers, population size thresholds in the absence of vaccines, and vaccine coverage thresholds. We further stream-lined our analyses to transmission rates of 5 to 8%, to correspond to the reported levels of face-mask-use/physical-distancing during the 2020 pandemic.

Our results suggest that, in the absence of vaccines, testing alone without reducing population size would not be sufficient to control an outbreak. If the population size is lowered to 34% (or 44%) of the actual population size to maintain contact rates at 4 (or 7) among non-essential workers, mass tests at 25% (or 33%) per day would help control an outbreak. With the availability of vaccines, the campus can be kept at full population provided at least 95% are vaccinated. If vaccines are partially available such that the coverage is lower than 95%, keeping at full population would require asymptomatic testing, either mass tests at 25% per day if vaccine coverage is at 70%, or mass tests at 33% per day if vaccine coverage is at 59%. If vaccine coverage is below 59%, to control an outbreak, in addition to mass tests at 33% per day, it would also require lowering the population size to 90%, 75%, and 60%, if vaccine coverage is at 46%, 31%, and 16%, respectively.

Threshold estimates from this study, interpolated over the range of transmission rates, can collectively help inform campus level preparedness plans for adoption of face mask/physical-distancing, testing, remote instructions, and personnel scheduling, during non-availability or partial-availability of vaccines, in the event of SARS-Cov2-type disease outbreaks.

Introduction

The COVID-19 pandemic caused by the SARS-CoV-2 virus has caused significant disease and economic burdens since its first outbreak in December 2019. Because of the absence of an effective vaccine, as of June 2020 at the time of this study and since March 2020, the main intervention for the prevention of COVID-19 transmissions had been to reduce contacts between people through lockdowns of non-essential organizations and services[1]. However, lockdowns are a threat to the economic stability of a nation as seen by the unprecedented rise in unemployment rates [2,3]. Therefore, while lockdowns are a good short-term strategy, for a long-term strategy, or until a vaccine becomes widely available, it has become necessary to identify alternate strategies and lifestyles that control the disease burden while minimizing the economic burden. Interventions that are effective include the use of face masks, physical distancing between persons at a recommended 6ft, and contact tracing and testing or mass testing to enable early diagnosis in the asymptomatic stage of infection [4]. However, removal of lockdowns should be strictly accompanied by a reopening plan that rapidly and efficiently enables the adoption of the above interventions to avoid an epidemic rebound. In addition to public health agencies, all members of a community, in both public and private sectors, play a key role in the development and implementation of a reopening plan that is most suited for their organization [5]. Among these sectors, universities and colleges bear a special burden to develop a reopening plan that include changes to a range of activities related to teaching, research, dining, housing, and extra-curricular activities.

We developed a compartmental differential equations model to simulate epidemic projections of a potential COVID-19 outbreak in a population of 38,000 individuals, which is representative of

undergraduate and graduate students, faculty, and staff in a typical residential university in the United States. We simulated epidemic projections of potential outbreaks under varying combinations of contact tracing and testing, and mass testing, to identify combinations that would reduce the effective reproduction number R_e to a value below the epidemic threshold of 1. R_e is directly proportional to the duration of infectiousness, transmission rate (the probability of transmission per contact per day, representing the infectiousness of the virus), and contact rate (the number of contacts per person per day) [6]. Asymptomatic testing through trace and test or mass tests lead to diagnosis in the asymptomatic phase of the infection, and thus, if persons diagnosed with infection are successfully quarantined, it reduces the duration of exposure [7–9] and thus reduce R_e. Physical distancing by the recommended 3 or 6ft and use of face masks can reduce transmission rate, and thus reduce R_e [10,11]. Reducing contact rate such as through transitioning to remote work to reduce population density on campus directly reduces R_e. Thus, different types of interventions help reduce each of these components of R_e. Here, we evaluated different combinations of test rates, transmission rates, and contact rates that help reduce R_e to below 1 to identify minimum levels of testing, physical distancing and face mask use, and population density necessary for effective control of an outbreak.

While it is generally known that increasing contact tracing and testing is necessary, studies evaluating testing at an organizational level, such as university, were only recently emerging at the time of this study in June 2020. One study that analyzed contact tracing in the general populations estimated that reducing R_0 of 1.5 to an R_e of 1 requires more than 20% of contacts traced, reducing $R_0$of 2.5 to an R_e of 1 requires more than 80% of contacts traced, and reducing

R_0 of 3.5 to an R_e of 1 requires more than 100% of contacts traced [12]. A modeling study applied to the Boston area [13] estimated that the best way-out scenario is a Lift and Enhanced Testing (LET) with 50% detection and 40% of contacts traced. According to this, the number of individuals that need to be traced per 1000 persons is below 0.1 under partial reopening and below 0.15 under total reopening. Models for a university were only recently emerging at the time of this study in June 2020, [14–17] but typically, most studies combine transmission rate and contact rate as one metric in the evaluation of testing.

In this study, instead of using a product of transmission rate and contact rate as one metric as typically done, we evaluated these separately, due to the following reasons. First, it helps systematically evaluate different interventions considering that different types of interventions help reduce each of the three components of R_e, testing reduces duration of exposed infectious, transitioning to remote and vaccinations reduce contact rates, and face mask use and 6ft distancing reduces transmission rate. Second, while adoption of each of these decisions are made at an organizational level, adherence and feasibility of face mask and 6ft distancing are highly influenced by individual behaviors and thus have a larger range of uncertainty. Third, while physical distancing and use of face masks can reduce transmission rate, the baseline transmission rate and expected reductions could vary based on multiple factors such as indoor vs. outdoor settings and ventilation, proper use and type of face mask [10,11,18,19], mode of transmission [20–23], and viral load in the index person [8,24]. Fourth, though we specifically focus this study on COVID-19 caused by the original SARS-CoV-2 virus, studying varying levels of transmission rates could help extrapolate findings to new variants or future outbreaks of viral respiratory infections with similar disease progressions [24], especially in the early stages when

specific data is lacking but when the same non-pharmaceutical interventions, such as face masks, physical distancing, remote instructions, and testing, are suitable options.

To systematically inform these analyses, we first evaluated different combinations of trace and test rate, mass test rate, and transmission rate for a range of contact rates, to identify the threshold contact rates that maintain infection cases below certain set levels of tolerance. We then used the contact rate thresholds to identify the population size thresholds, i.e., the maximum population size on campus, which could help inform decisions related to campus activities such as the fraction of classes to transition to remote. We also used the contact rate thresholds to identify the vaccine coverage thresholds for a post-vaccine era, i.e., the vaccine coverage necessary for a campus to return to a normal population size. We also identify, under each intervention combination, the number of trace and tests and quarantines. These metrics could collectively help inform development of a preparedness plan for reopening a university during the COVID-19 pandemic or to set protocols in the event of future outbreaks.

Methodology

Simulation methodology

We developed a compartmental model for simulating epidemic projections over time. The epidemiological flow diagram for the compartmental model is depicted in Fig 1A. Each box is an epidemiological state, and each arrow represents a transition from one state to another. Note, each compartment is further split by age and gender, but for clarity of notations, we do not include it in the equations below.

Fig 1. Overview of the extended SEIR compartmental model.
(A) Compartmental model flow diagram. (B) Natural disease progression of SARS-COV-2 virus in infected patients.
S = susceptible, L = exposed and not infectious (Latent stage) (asymptomatic), E = asymptomatic and infectious , I = symptomatic and infectious, Q_L = exposed and not infectious (Latent) and Quarantined (diagnosed), Q_E = asymptomatic and infectious and Quarantined (diagnosed), Q_I = Infectious and Quarantined (diagnosed), H = Hospitalized, R = Recovered, and D = Deaths.

Let $\pi_t = [\mathrm{S}, \mathrm{L}, \mathrm{E}, \mathrm{I}, \mathrm{Q_L}, \mathrm{Q_E}, \mathrm{Q_I}, \mathrm{H}, \mathrm{R}, \mathrm{D}]$ be a vector, with each element representing the number of people in a compartment at time t, specifically,

S = the number of susceptible individuals at time t,

L = the number of exposed, but asymptomatic and not infectious individuals (latent stage; also, the non-infectious phase of incubation stage) at time t,

E = the number of asymptomatic or pre-symptomatically infectious individuals (infectious phase of the incubation stage) at time t,

I = the number of infectious individuals (symptomatic and infectious stage) at time t,

Q_L = the number of exposed, asymptomatic and not infectious (latent) and quarantined individuals (diagnosed) at time t,

Q_E = the number of asymptomatic or pre-symptomatically infectious and quarantined individuals (diagnosed) at time t,

Q_I = the number of infectious and quarantined individuals (diagnosed) at time t,

H = the number of hospitalized individuals at time t,

R = the number of recovered individuals at time t, and

D = the number of deaths at time t.

Epidemic states $L, E,$ and I were formulated such that each state represented a distinct phase along the natural disease progression (see Fig 1B), and they collectively included all phases. Over time, persons from S can transition to $L, E,$ and I, and upon diagnoses, transition to $Q_L, Q_E,$ or Q_I, and further to $H, R,$ or D, (transitions represented by arrows in Fig 1A) as discussed below.

Let,

p = transmission rate (probability of transmission per contact per day)

c = contact rate (number of contacts per person per day)

N = total population who are alive,

a_B = symptom-based testing rate,

$a_{C,t}$ = rate of testing through contact tracing at time t,

$a_{U,t}$ = rate of testing through mass testing at time t,

ρ = test sensitivity for asymptomatic testing (through mass tests or trace and test)

$days_L$ = duration in latent period,

$days_{incub}$ = duration in incubation period,

$days_{IR}$ = time from onset of symptoms to recovery,

$days_{Q_I R}$ = time from diagnosis to recovery,

$days_{Q_I H}$ = time from diagnosis to hospitalization,

$days_{HR}$ = time from hospitalization to recovery,

$days_{HD}$ = time from hospitalization to death,

$prop_{hosp}$ = proportion hospitalized, and

$prop_{severe}$ = proportion of cases that are severe.

Then, we can write the equations for transition rates (arrows in Fig 1A) as follows:

$r_{S,L} = \frac{pc(E+I)}{N}$, which assumes that only infected persons in E and I can transmit, persons in Q_E and Q_I self-quarantine, and persons in L and Q_L are not infectious.

$r_{L,E} = \frac{1}{days_L}$

$r_{E,Q_I} = \frac{(prop_{severe})}{days_{incub} - days_L}$, which assumes that only a proportion of cases that are severe ($prop_{severe}$) get diagnosed immediately because of exhibition of symptoms, we use the proportion hospitalized as a proxy for severe cases; the denominator is based on the assumption that the duration in state E is equal to the difference between the duration of the incubation period and the latent period.

$r_{E,I} = \frac{(1-prop_{severe})}{days_{incub} - days_L}$, which follows from above.

$r_{I,Q_I} = a_B$, which assumes that under symptom-based testing, only persons who show moderate to severe symptoms get diagnosed and those who show mild symptoms do not.

$r_{Q_I,H} = \frac{prop_{hosp}}{days_{Q_I H}}$, for $prop_{hosp}$ we use the proportion of persons hospitalized among those diagnosed through symptom-based testing.

$r_{L,Q_L} = \rho a_{U,t} + \left(1 - \rho a_{U,t}\right)\rho a_{C,t}$, which assumes that under the implementation of both mass testing and contact tracing and testing, persons diagnosed through mass test will not be tested again on the same day through contact tracing (as our time unit is daily).

$r_{E,Q_E} = \rho a_{U,t} + \left(1 - \rho a_{U,t}\right)\rho a_{C,t}$, which is similar to above.

$r_{I,R} = (1 - a_B)[\rho a_{U,t} + \left(1 - \rho a_{U,t}\right)\rho a_{C,t}] + \frac{1}{days_{IR}}$, which assumes that persons with mild cases that did not get diagnosed through symptom-based testing have a chance of getting tested through additional testing options, and self-quarantine upon diagnosis. Note that we did not separately model asymptomatic cases but incorporated that into the

symptom-based testing rate (a_B) by consider that 35% of cases are mild to no symptoms and thus do not have a chance of being diagnosed through symptom-based testing.

$r_{Q_L,Q_E} = \frac{1}{days_L}$

$r_{Q_E,Q_I} = \frac{[a_B(1 - prop_{severe}) + (prop_{severe})]}{days_{incub} - days_L}$, theoretically, r_{Q_E,Q_I} should be the same as $r_{E,I}$, however, as the rate of transitioning from Q_I to H is fixed to fit to the proportion hospitalized under symptom-based tests, if extensive testing is conducted, the number of persons in Q_I would increase thus, incorrectly inflating the number of persons who are hospitalized; To avoid this, we modified the equation to consider that the number of persons flowing into $Q_I$would be equal to the proportion flowing from I to Q_I under symptom-based testing.

$r_{Q_E,R} = \frac{(1-[a_B(1 - prop_{severe}) + (prop_{hosp})])}{days_{incub} - days_L}$, which follows from the above equation.

$r_{Q_I,R} = \frac{1-prop_{hosp}}{days_{Q_I R}}$

$r_{H,R} = \frac{prop_{recover}}{days_{HR}}$

$r_{H,D} = \frac{(1-prop_{recover})}{days_{HD}}$

Note: $r_{s,s}$ is the testing rate (either through mass test or trace and test). We assumed that susceptible persons go back to the susceptible state after testing, i.e., we did not explicitly track false positives.

The values and ranges for the above epidemic parameters used in the compartmental simulation model are presented in Appendix Table S1.

We simulate the epidemic over time using the following system of differential equations

$$\pi_{t+1} = \pi_t + \pi_t Q_t . dt$$

where, Q_t = a matrix of transition rates between states (arrows in Fig 1A), and dt = time-step. We use a time-unit of per day for the transition rates in Q_t and set $dt = \frac{1}{10}$, and thus, the model simulates every 10th of a day.

The expansion of the system of differential equations are as follows:

$$S_{t+1} = S_t + (-r_{S,L} S_t)\, dt$$

$$L_{t+1} = L_t + (r_{S,L} S_t - (r_{L,E} + r_{L,Q_L}) L_t)\, dt$$

$$E_{t+1} = E_t + (r_{L,E}\, L_t - (r_{E,I} + r_{E,Q_E} + r_{E,Q_I} + r_{E,R}) E_t)\, dt$$

$$I_{t+1} = I_t + (r_{E,I}\, E_t - (r_{I,Q_I} + r_{I,R}) I_t)\, dt$$

$$Q_{L,t+1} = Q_{L,t} + (r_{L,Q_L}\, L_t - (r_{Q_L,Q_E}) Q_{L,t})\, dt$$

$$Q_{E,t+1} = Q_{E,t} + (r_{E,Q_E}\, E_t - (r_{Q_E,Q_I} + r_{Q_E,R}) Q_{E,t})\, dt$$

$$Q_{I,t+1} = Q_{I,t} + ((r_{E,Q_I}\, E_t + r_{Q_E,Q_I}\, Q_{E,t} + r_{I,Q_I} I_t) - (r_{Q_I,H} + r_{Q_I,R}) Q_{I,t})\, dt$$

$$H_{t+1} = H_t + (r_{Q_I,H} Q_{I,t} - (r_{H,R} + r_{H,D}) H_t)\, dt$$

$$\mathrm{R}_{t+1} = R_t + (r_{Q_E,R} Q_{E,t} + r_{Q_I,R} Q_{I,t} + r_{I,R} I_t + r_{H,R} H_t)\, dt$$

$$D_{t+1} = D_t + r_{H,D} H_t dt$$

We can further expand by substitution of the rate terms with their equations as follows:

$$S_{t+1} = S_t + \left(-\frac{pc(E + I)}{N}\right) S_t dt$$

$$L_{t+1} = L_t + \left(\frac{pc(E + I)}{N} S_t - \left(\frac{1}{days_L} + \rho a_{U,t} + (1 - \rho a_{U,t}) \rho a_{C,t}\right) L_t\right)\, dt$$

$$E_{t+1} = E_t + \left(\frac{1}{days_L} L_t - \left(\frac{(1 - prop_{severe})}{days_{incub} - days_L} + (\rho a_{U,t} + (1 - \rho a_{U,t}) \rho a_{C,t}) + \frac{(prop_{severe})}{days_{incub} - days_L}\right) E_t\right)\, dt$$

$$I_{t+1} = I_t + \left(\frac{(1 - prop_{severe})}{days_{incub} - days_L} E_t - \left(a_B + (\rho a_{U,t} + (1 - \rho a_{U,t})\rho a_{C,t} + \frac{1}{days_{IR}})\right) I_t\right) dt$$

$$Q_{L,t+1} = Q_{L,t} + \left((\rho a_{U,t} + (1 - \rho a_{U,t})\rho a_{C,t})\, L_t - \left(\frac{1}{days_L}\right) Q_{L,t}\right)\, dt$$

$$\begin{aligned} Q_{E,t+1} = Q_{E,t} & \\ & + \Bigg((\rho a_{U,t} + (1 - \rho a_{U,t})\rho a_{C,t})\, E_t \\ & - \left(\frac{[a_B(1 - prop_{severe}) + (prop_{severe})]}{days_{incub} - days_L} + \frac{1 - prop_{hosp}}{days_{Q_I R}}\right) Q_{E,t}\Bigg)\, dt \end{aligned}$$

$$\begin{aligned} Q_{I,t+1} = Q_{I,t} & \\ & + \Bigg(\frac{(prop_{severe})}{days_{incub} - days_L} E_t + \frac{[a_B(1 - prop_{severe}) + (prop_{severe})]}{days_{incub} - days_L} Q_{E,t} + a_B I_t \\ & - \left(\frac{prop_{hosp}}{days_{Q_I H}} + \frac{1 - prop_{hosp}}{days_{Q_I R}}\right) Q_{I,t}\Bigg) dt \end{aligned}$$

$$H_{t+1} = H_t + \left(\frac{prop_{hosp}}{days_{Q_I H}} Q_{I,t} - \left(\frac{prop_{recover}}{days_{HR}} + \frac{(1 - prop_{recover})}{days_{HD}}\right) H_t\right)\, dt$$

$$\begin{aligned} R_{t+1} = R_t + (\frac{\left(1 - [a_B(1 - prop_{severe}) + (prop_{hosp})]\right)}{days_{incub} - days_L} Q_{E,t} + \frac{1 - prop_{hosp}}{days_{Q_I R}} Q_{I,t} + (\rho a_{U,t} \\ + (1 - \rho a_{U,t})\rho a_{C,t} + \frac{1}{days_{IR}}) I_t + \frac{prop_{recover}}{days_{HR}} H_t)\, dt \end{aligned}$$

$$D_{t+1} = D_t + \frac{(1 - prop_{recover})}{days_{HD}} H_t dt$$

Input data assumptions and sources for simulation model

For the rates of natural disease progression, we used estimates from other studies in the literature. The description of the data, sources, and values (with ranges and medians where applicable) for all parameters are available in the Supplemental Appendix Table S1. Briefly, we assumed an incubation period duration of 5.4 days [25], the first 2.5 days in stage L (not infectious and asymptomatic) [26], and the remaining 2.9 days in stage E (infectious and asymptomatic). We assumed about 65% of cases develop medium to severe symptoms [27] and, in the absence of test and trace or mass test, can be diagnosed through symptom-based testing. We assumed the remaining 35% of cases show mild to no symptoms and can be diagnosed only through trace and test, or universal mass test. We assumed an average duration of 3.5 days from the time of onset of symptoms to hospitalization [28], with the proportion hospitalized varying as a function of age. For mild cases, we assumed an average duration of 7 days from the time of onset of symptoms to recovery [28]. We assumed case fatality rates vary as a function of age and gender.

Interventions (Modified SUB-SECTION)

Mass test and trace and test: We evaluated the following scenarios: mass test only, trace and test only, delayed trace and test only, combination mass test and trace and test, and combination mass test and delayed trace and test, each at different rates of testing, as follows. We evaluated mass testing at rates of 5% 10%, 20%, 25%, and 33% of the population per day, which is equivalent to testing once every 20 days (5% per day over every 20-day period), 10 days, 5 days, 4 days, and 3 days (33% per day every 3-day period), respectively. We modeled the rate of trace and test as the inverse of the time from infection to effective isolation of a contact, i.e., the sum of the number of days passed since contact with an individual (as reported by the index diagnosed person) and the number of days into the future to find, test, and isolate the infected contact. We chose this

definition as each component in this duration can vary significantly for every diagnosed person and for each of their contacts. In the case the contact is never found, the duration would be the full duration of infection. Thus, this definition of trace and test can be comparable to data that is typically collected. Specifically, the trace and test rate here should be compared to the average of the inverse of the time from reported contact to either effective isolation of that contact or maximum infection duration (whichever is the least value), averaged over all contacts. We evaluated trace and test rates at levels of 10%, 17%, 20%, 25%, 33%, and 50%, equivalent of 10 days, 6 days, 5 days, 4 days, 3 days, and 2 days, respectively, from the time of transmission of infection to effective isolation of that contact. We evaluated combinations of mass test and trace and test, by varying mass tests between 5% and 33% per day and keeping trace and test at 50% as this higher rate of trace and test maybe more feasible with mass test than symptom-based test only. We assumed trace and test would initiate within the first 5 cases of diagnosis. Considering there may be delays in setting up a trace and test system (such as in events of new outbreaks in the future or failure to respond quickly), to tests its sensitivity, we evaluated scenarios by delaying the initiating of trace and test to after diagnosis of 20 cases. Thus, the scenarios referred to as ‘trace and test only’ and ‘combination tests’ refers to initiation of trace and test after first 5 cases of diagnosis. And the scenarios referred to as ‘delayed trace and test only’ and ‘delayed combination tests’ refers to delaying initiation of trace and test after diagnoses of 20 cases. In all scenarios, we applied baseline symptom-based testing, assumed test results are available within 24 hours, and persons testing positive self-quarantine for 14-days. For diagnosis in asymptomatic stages, i.e., diagnosis through trace and test or mass test, we assumed a test sensitivity of 0.9 [29].

Non-pharmaceutical interventions: We evaluated transmission rates (p) of 14% (baseline), 8% (mid), 5.4% (lower-mid), and 2.5% (lowest). The baseline value of p corresponds to an average estimate under no interventions (physical distancing and no face masks) [11,30]. A transmission rate of 8% corresponds to the expected rates with the use of face masks in a non-health care setting [11]. Transmission rates of 5.4% and 2.5% correspond to expected rates under 3ft and 6ft physical distancing, respectively [11] (see Supplemental Appendix Table S2). We evaluated contact rates between 1 and 25 (c), we did not differentiate between on-campus and off-campus contact rates.

Application to a university setting

Demographic data: We used the Fall 2018 student enrollment data from the University of Massachusetts - Amherst, Amherst, MA, to determine the population size of undergraduate and graduate students and their age and gender distributions [31]. For faculty and staff, we used the age distribution of persons 25 years and older from the Town of Amherst, MA, where the university is located [32]. To initiate an outbreak, we assumed 4 to 5 infected cases on Day 1, estimated as follows. We assumed that the proportion of incoming students who are infected would be equal to the prevalence of Massachusetts in June 2020. We also assumed that all incoming students would be tested, and about 10% of infected cases would be false negatives. Prevalence is unknown, as not all cases are diagnosed and diagnosed cases are not specifically tracked. Therefore, to estimate prevalence of COVID-19 in MA, we used the simulation model to determine the ratio of new diagnosis to persons with infection and applied that ratio to the number of new diagnoses on June 26th in MA. This resulted in about 4 infected cases on day 1 remaining undetected, thus initiating an outbreak. We also assumed that at the beginning of

every week, there would be about 3 to 4 infections from outside, calculated by assuming that about 10% of the population are likely to mix with the population outside the university or travel out of Amherst during weekends and are not tested upon return. Based on the above, we initialized the model on Day 1 with 4 infected persons in the Latent stage and added 3 to 4 outside cases to the Latent stage at the beginning of every week. We simulated the model for a 90-day period to represent the duration of the expected Fall 2020 semester.

Tolerance on the number of infected cases for identifying contact rate thresholds

We evaluated contact rate thresholds under three levels of epidemic tolerance: relaxed tolerance, medium tolerance, and tight tolerance. Relaxed tolerance marked the point beyond which there was an exponential growth in infections, the maximum number of infections under this tolerance level was about 170. For medium tolerance, we set the number of infections to less than 77, and for tight tolerance, we set the number of infections to less than 50. The latter two cases correspond to maximum infections for a case fatality rate (CFR) of 2%, which is the reported CFR in the general population for the United States [33]. That is, 1/0.02 gives the 50 cases threshold and 77 is obtained by further dividing that by 65%, which is the proportion of cases with medium to severe symptoms [27], to account for the remaining 35% of cases with mild to no symptoms that were likely unreported and thus not included in the CFR calculation. As the CFR for COVID-19 is much lower in university student aged populations, the use of the alternative tolerance on the number of infections helps avoid spill-over effect of a breakout into the community. Also note that, because of our assumptions for the number of initial cases and cases per week entering the population from outside, the minimum number of cases over the 90-day period would be 45. Therefore, the tolerance of 50 cases is a very tight tolerance.

Population behavioral data

While there was limited data on contact rates specific to university students at the time of this original study in June 2020, studies conducted since then have generated some (though limited) data on population behaviors. These data include contact rates and behaviors related to use of non-pharmaceutical interventions such as face mask and 6 ft physical distancing, mostly either self-reported in surveys or estimations made in other modeling studies informed through university settings. We briefly summarize the data from each study in the Appendix Table S3. Some of the surveys were specific to university students in the United States while others were either university students in other countries or general populations. Studies on surveys of university students, when partial shutdowns were enforced and universities resorted to varying levels of remote classes, reported 6 to 8 contacts per person per day [34,35]. However, students who self-reported as providing essential services or caring for non-household members (~23%) reported an average contact rate of about 14 per person per day [36]. Modeling studies that estimated contacts among university students for a scenario prior to the pandemic assume contact rates of 16 to 24 per person per day [37–39]. Using data on face mask use and physical distancing, specifically originating from three surveys of student and general population in the United States [38,42,43] and the transmission rates corresponding to these interventions (summarized in Appendix Table S3), we calculate the expected transmission rate to be between 5% and 8%. We use these estimates to further streamline our analyses.

Interpretation of contact rate thresholds: size of social circle, population size, and vaccine coverage

We utilize the contact rate thresholds, under the different levels of testing and transmission rate (face mask use and physical distancing), to identify four additional metrics that would help inform campus decisions: first, the contact rate threshold among non-essential workers after accounting for the higher contact rate among essential workers, which would help inform the size of social circles at the individual level and schedule campus activities; second, the threshold values for population size on campus as a proportion of the actual population size, which would help decisions related to the fraction of remote vs. face-to-face classes, on-campus housing, and other campus activities for the era of pre-vaccine availability; third, for the era of post-vaccine availability, the threshold values for vaccination coverage for the university to return to normal (i.e., 100% population size); fourth, the threshold values for population sizes under varying levels of vaccine coverage, which would help decisions related to campus activities in the event that vaccines are only partially available that coverage is not at levels sufficient to fully return to normal. All four metrics would be used alongside decisions related to the level of testing.

The metrics were estimates as follows. Suppose $\hat{C}$ is the contact rate threshold, we estimate the first metric as $\hat{C}_n = (\hat{C} - C_e p_e)/(1 - p_e)$, where $\hat{C}_n$ is the contact rate threshold among non-essential workers (we limit $0 \leq \hat{C}_n \leq \hat{C}$), C_e is the contact rate among essential workers (we assume C_e =14 [36]), and p_e is the proportion of the population who are essential workers (we assume p_e =23% [36]).

The interpretation of the second, third, and fourth metrics arise from our simplifying assumption that contact rates are directly proportional to the population density [40], $C = c_0 \rho$; $\rho = N/A$; where C is the actual contact rate (under regular face-to-face instructions), ρ is the density, N is the population size, A is the campus area, and c_0 is a constant. Further, we assume that university campuses maintain similar levels of population density under regular work conditions, i.e.,

though the population sizes may vary across universities, the campus area also changes proportionally so that the population density is similar, and thus, the contact rates under regular work conditions are also similar. Multiple studies reported similar contact rates of 16 to 24 under regular working conditions supporting this assumption [41,42]. Thus, if our estimated contact rate thresholds (say $\hat{C}$) are lower than the actual contact rates of 16 to 24 (C), given fixed area (A), achieving $\hat{C}$ would require reducing the population size (N) proportional to the reduction in contact rate, i.e., $\hat{C}/C = \hat{N}/N$ ($= say\ \hat{p}$), implying that the population size on campus should be at a maximum of $\hat{p}$% of its original population size ($\hat{p} = \hat{C}/C$).

The third metric on interpretation of threshold for vaccination coverage (say $\hat{V}$) follows from the above assumptions. Achieving a contact rate threshold of $\hat{C}$ when universities are back to regular face-to-face classes, i.e., $\hat{N} = N$ or $\hat{p} = 1$, would require that $(1 - \hat{C}/C)$ proportion of the population be effectively vaccinated. More precisely, vaccine coverage should be at least $\hat{V} = \left(1 - \left(\hat{C}/C\right)\right)/v_e$, where v_e is vaccine efficacy. Intuitively, this is saying that though the actual contact rate is C, because $\hat{V}$% are vaccinated and protected from infection or transmitting, the effective contact rate is $\hat{C}$. This implies that a threshold contact rate of $\hat{C}$ can be achieved, while maintaining $\hat{p} = 1$, if $\hat{V}$% are vaccinated. The vaccine coverage results presented here were estimated by assuming a vaccine efficacy of 95%, and thus, in the event that this changes, the vaccine coverage results should be adjusted by multiplying with 95% and dividing by the new value.

Following from above, the fourth metric considers the fact that if the actual vaccine coverage (say V) is less than $\hat{V}$, achieving the contact rate threshold ($\hat{C}$) would also require some reduction in N. Specifically, the population size on campus should be at a maximum of $\hat{p}$% of its original population size, with $\hat{p} = 1 - \left((1 - V)C - \hat{C}\right)/C$, derived as follows. We can write $(1 - V)C - \hat{C}$ as the number of excess contacts, i.e., the number to reduce after accounting for the proportion vaccinated $\left((1 - V)C\right)$, the proportion of contacts to reduce would then be $\left((1 - V)C - \hat{C}\right)/C$, and finally, applying the same assumptions as in the second metric would give the equation for $\hat{p}$. If the vaccination coverage is zero, i.e., $V = 0$, we would get back $\hat{p} = \hat{C}/C$. If $V = 1$, then $\hat{p} = 1 + \hat{C}/C$, which implies that even if $\hat{C} = 0$, the campus can fully open. We bound $0 \leq \hat{p} \leq 1$, such that, even if $\hat{C} > 0$ we interpret this as fully back to normal population size (though it would mathematically imply that the campus can handle a higher density from an epidemic perspective, e.g., influx from outside).

Thus, to keep within the infection tolerance levels, $\hat{C}$ would mark the maximum average contact rate over the full population, $\hat{C}_n$ the maximum average contact rate for non-essential workers after accounting for the higher contact rate among essential workers, $\hat{p}$ the maximum proportion of the population who should return back to campus (either when $V = 0$ or $0 < V \leq \hat{V}$), and $\hat{V}$ the minimum vaccine coverage to fully return back to normal ($\hat{p} = 1$).

Results

For all levels of testing, transmission rates, and tolerance, we present the contact rate thresholds in the overall population ($\hat{C}$), the contact rate thresholds for non-essential workers ($\hat{C}_n$) after

accounting for the higher contact rate among essential workers, population size threshold ($\hat{p}$) in the event of no vaccines ($V = 0$), and vaccination coverage thresholds ($\hat{V}$) for resuming normal activities ($\hat{p} = 1$) in the Appendix Table S4. These metrics, interpolated across the wide range of transmission rates, are also plotted in Appendix Fig S1, Fig S2, and Fig S3. We also present these metrics in Fig 2 for only the feasible combinations, i.e., those with $\hat{C}_n \geq 2$ in the transmission rate range of 5% to 8% (corresponding to reported use of face mask and physical distancing among university population – see 'Population behavioral data' above), along with peak numbers to trace and test and quarantine. In Fig 3, for transmission rates of 5% and 8%, we present results corresponding to both vaccination coverage threshold ($\hat{V}$) keeping $\hat{p} = 1$ under varying levels of testing, and values of $\hat{p}$ when vaccine coverage (V) are at levels lower than that needed under maximum testing (i.e., $0 < V \leq \hat{V}$). We present the same results for the full range of transmission in Appendix Table S5. We present results corresponding to the reported contact rates (6 to 8 under remote instructions [34,35] and 16 to 24 under regular face-to-face instructions [41,42]), including number of cases, and peak numbers to trace and test and quarantine, for all levels of testing in the Appendix Table S6, and only the suitable scenarios, defined as those that do not see an exponential growth in infections, in Fig 4.

Fig 2. Feasible combinations of testing and population size or combinations of testing and vaccine coverage for effective epidemic control, keeping face mask use and physical distancing at reported levels

Relaxed tolerance: Less than 1 death or 170 cases of infection. This point also marks the point beyond which there was an exponential growth in infections in the simulated runs.
Medium tolerance: Less than 77 cases of infections. Estimated as 1/CFR /%reported cases. We assumed a case fatality rate (CFR) of 2% in the general population in the US [33]; We assumed that 65% of infected cases are reported, which is the proportion showing medium to severe symptoms [27].
Tight tolerance: Less than 50 cases of infection. Estimated as 1/CFR. We assumed a case fatality rate (CFR) of 2% in the general population in the US [33].
S: symptomatic testing, U: Mass test, T: trace and test, dT: delayed trace and test.

 We defined a testing scenario as feasible if estimated contact rate thresholds among non-essential workers were at least 2 when transmission rates were 5% and 8% (corresponding to reported use of face mask and physical distancing [11,30]).
‡ We assume 23% are essential workers and have a contact rate of 14 per day [36].

† Contact rate threshold (per person per day): the average value for contacts per person per day to keep infections below the tolerance level. These reduced contact rates, from the original rates of 16 to 24 [41,42], can be achieved through either reduction in population size or vaccine coverage at the noted thresholds.

Feasible scenarios, i.e., $\hat{C}_n \geq 2$ in the transmission rate range of 8% to 5%, under the relaxed tolerance (Fig 2) include the following. Mass test only at 25% per day with contact rate threshold of 2 to 6 among non-essential workers ($\hat{C}_n$), which correspond to maintaining a population size threshold ($\hat{p}$) of 26% to 42% if vaccine coverage is 0% or maintaining a vaccine coverage threshold ($\hat{V}$) of 78% to 61% if keeping population size at 100%; (Note: ranges for all results correspond to values under transmission rate of 5% to 8%, respectively, in Fig 2. and, for vaccine coverage and population size, it additionally takes the average of values under actual contact rate (C) of 16 and 24). Mass test only at 33% per day with $\hat{C}_n$ of 5 to 9, which would correspond to maintaining a $\hat{p}$ of 36% to 52% if vaccine coverage is 0% or maintaining a $\hat{V}$ of 67% to 50% if keeping population size at 100%. Trace and test only at 33% with $\hat{C}_n$ of 4 to 8, which would correspond to maintaining a $\hat{p}$ of 31% to 47% if vaccine coverage is 0% or maintaining a $\hat{V}$ of 72% to 56% if keeping population size at 100%. Trace and test only at 50% with $\hat{C}_n$ of 6 to 11, which would correspond to maintaining a $\hat{p}$ of 42% to 63% if vaccine coverage is 0% or maintaining a $\hat{V}$ of 61% to 39% if keeping population size at 100%. Any of the combination tests with $\hat{C}_n$ ranging from 10 to 16 under the least testing combination scenario to 18 to 25 under the highest testing scenario, which would correspond to maintaining a $\hat{p}$ of 57% to 83% or $\hat{V}$ of 45% to 18% (under the least testing combination scenarios) to $\hat{p}$ of 88% to 100% or $\hat{V}$ of 13% to 0% (under the highest testing combination scenarios) (Fig 2). Finally, any of the delayed combination tests with $\hat{C}_n$ ranging from 4 to 9 under the least testing combination scenario to 15 to 23 under the highest testing scenario, which would correspond to maintaining a $\hat{p}$ of 31% to

52% or $\hat{V}$ of 72% to 50% (under the least testing combination scenarios) to $\hat{p}$ of 78% to 98% or $\hat{V}$ of 23% to 2% (under the highest testing combination scenarios) (Fig 2).

The peak number of trace and tests in the above feasible scenarios, per 10,000 persons, varied from 14 to 55 per day in the trace and tests only, 48 to 12 per day in the combination tests, and 55 to 21 per day in the delayed combination tests, the range corresponding to the lowest to the highest test rates, respectively (Fig 2). The peak number of quarantines in the above feasible scenarios, per 10,000 persons, varied from 6 to 7 per day in the mass tests only, 18 to 23 per day in the trace and tests only, 20 to 9 per day in the combination tests, and 25 to 16 per day in the delayed combination tests, the range corresponding to the lowest to the highest test rates, respectively (Fig 2).

Feasible scenarios under the medium tolerance (Fig 2) include only those with combination tests and at least 20% mass tests per day in delayed combination tests. Contact rate thresholds ranged from 2 to 5 under the least feasible combination test (5% mass tests per day) to 8 to 14 under the highest combination test (33% mass tests per day), and 2 to 5 under the least feasible delayed combination test (20% mass tests per day) to 5 to 9 under the highest delayed combination test (33% mass tests per day). The above contact rate threshold results, for the combination tests, would correspond to maintaining a population size threshold of 26% to 36% or vaccine coverage threshold of 78% to 67% under the least combination test, and population size threshold of 47% to 73% or vaccine coverage threshold of 56% to 29% under the highest combination test. For the feasible delayed combination tests, it would correspond to maintaining a population size threshold of 26% to 36% or vaccine coverage threshold of 78% to 67% under the least feasible

delayed combination test, and population size threshold of 36% to 52% or vaccine coverage threshold of 67% to 50% under the highest delayed combination tests. The peak number of trace and tests in the feasible scenarios, per 10,000 persons, varied from 9 to 3 per day in the combination tests, and 4 to 3 per day in the delayed combination tests, the range corresponding to the lowest to the highest test rates, respectively (Fig 2). The peak number of quarantines in the feasible scenarios, per 10,000 persons, varied from 6 to 5 per day in the combination tests, and 6 to 5 per day in the delayed combination tests, the range corresponding to the lowest and the highest test rates, respectively (Fig 2).

Under the tight tolerance there were no feasible scenarios.

Fig 3. Combinations of testing, vaccine coverage, and population size for effective control of epidemic, keeping face mask use and physical distancing at reported levels.

S: symptomatic testing, U: Mass test, T: trace and test, dT: delayed trace and test.

‡ We assume 23% are essential workers and have a contact rate of 14 per day [36].

† Contact rate threshold (per person per day): the average value for contacts per person per day to keep infections below the tolerance level. These reduced contact rates, from the original rates of 16 to 24 [41,42], can be achieved through either reduction in population size or vaccine coverage at the noted thresholds.

In Fig 3, we present results corresponding to both vaccination coverage threshold ($\hat{V}$) keeping $\hat{p} = 1$ under varying levels of testing, and values of $\hat{p}$ when vaccine coverage (V) is at levels lower than that needed under maximum testing (i.e., $0 < V \leq \hat{V}$). Keeping $\hat{p} = 1$, to keep infection cases within the tolerance levels used here, implementing symptomatic-testing-only will be sufficient if at least 95% ($\hat{V}$) of the population are vaccinated. With the addition of mass tests only, 5%, 10%, 20%, 25%, and 33% mass tests per day would be sufficient if at least 89%-95%, 84%-89%, 74%-84%, 63%-79%, and 53%-68% ($\hat{V}$) of the population are vaccinated, respectively, the range corresponding to transmission rate of 5%-8%, i.e., the unvaccinated

continue to use face masks and maintain physical distancing at current compliance levels Fig 3. If vaccine coverage (V) is below 53%, it would be necessary to also reduce the population size. If vaccine coverage (V) is between 38% and 53%, in addition to mass tests at 33% per day, it would be necessary to maintain a population size threshold ($\hat{p}$) of at most 90% on average, and the unvaccinated continue to use face masks and maintain physical distancing at current compliance levels. If vaccine coverage (V) is between 23% and 38%, in addition to mass tests at 33% per day, it would be necessary to maintain a population size threshold ($\hat{p}$) of at most 75% on average, and the unvaccinated continue to use face masks and maintain physical distancing at current compliance levels. If vaccine coverage (V) is between 8% and 23%, in addition to mass tests at 33% per day, it would be necessary to maintain a population size threshold ($\hat{p}$) of at most 60% on average, and the population continue to use face masks and maintain physical distancing at current compliance levels.

Addition of trace and tests only at the lowest rate of 10% (or highest rate of 50%) will be sufficient if at least 84% to 95% are vaccinated (or 42% to 62% are vaccinated) (Fig 3). If vaccine coverage (V) is below 42% it would be necessary to also reduce the population size, keeping it to at most 86% on average if vaccine coverage is between 27% and 42%, and to at most 72% on average of vaccine coverage is between 12% and 27%. Considering that 50% trace and test, equivalent to 2 days from infection to isolation is a very tight timeline (which may be more feasible only with digital tracing), we also evaluated at a maximum of 20% trace and test, equivalent to 5 days from infection to isolation. At this level of 20%, trace and test only will be sufficient if vaccine coverage is at least 74% to 84%, and below that will require a reduction in population size, e.g., to 45% on average if only 14% to 24% of the population are vaccinated. All

the above scenarios for trace and tests also correspond to the continued use of face masks and physical distancing at least at current compliance levels.

Fig 4. Suitable testing options for effective control of epidemic and corresponding resource needs, keeping face mask use and physical distancing and remote instructions at reported levels.

S: symptomatic testing, U: Mass test, T: trace and test, dT: delayed trace and test
†Reported value of contact rate is on average between 6 and 8 per person per day under remote instructions [34,35]; Using our estimations, this would correspond to population size of about 31% and 42%

‡ reported contact rate is on average between 16 and 24 per person per day under face-to-face instructions [41,42]
 We defined a testing scenario as suitable if there were no exponential growth in infections when transmission rates were 5% and 8% (corresponding to reported use of face mask and physical distancing [11,30])

Shaded	Infeasible scenarios: Scenarios that lead to an exponential growth in infections

Next, we estimated the total cases of infections and deaths over a 90-day period (equivalent to a semester) under varying testing scenarios and transmission rates of 5% to 8% (corresponding to observed use of face mask and physical distancing), first, by assuming a contact rate of 6 to 8 per person per day (corresponding to reported numbers under remote instructions [34,35]), equivalent to a rate of 4 to 6 among non-essential workers, and second, by assuming contact rates of 16 to 24 per person per day (corresponding to the numbers estimated for regular face-to-face instructions [41,42]). We present all results in the Appendix Table S6 and the suitable testing scenarios, as those that did not see an exponential growth in infections, in Fig 4. Suitable testing scenarios for contact rate of 6 to 8 (remote instructions) include 33% per day mass test only, at least 33% trace and test only, all combination tests, and all delayed combination tests. The peak number of trace and tests, per 10,000 persons, in these suitable scenarios varied from 9 to 28 per day with 33% trace and test only, 12 to 36 per day with 50% trace and test only, 7 to 19 per day in the least test rate to 2 to 3 per day in the highest rate of combination tests, and 16 to 64 per day in the least test rate to 2 to 6 per day in the highest test rate of delayed combination tests (Fig 4). The peak number of quarantines, per 10,000 persons, in the feasible scenarios varied from 3 to 13 per day in the mass tests only, 9 to 33 per day in the trace and tests only, 5 to 12 per day in the

combination tests, and 8 to 21 per day in the delayed combination tests (Fig 4). There were no suitable testing scenarios for contact rate of 16 to 20 (face-to-face instructions), i.e., normal face-to-face classes with face mask use and physical distancing alone are insufficient to control an outbreak.

Discussions

This work estimates, under varying combinations of mass test, trace and test, and transmission rate, the contact rate thresholds that would help efficiently control an infectious disease outbreak on residential university campuses in the United States. The metric typically used in the COVID-19 literature for evaluating testing strategies is the reproduction number R_0, which combines the contact rate and transmission rate. As interventions that influence transmission rates are different than those that influence contact rates, separating these parameters help systematically evaluate metrics to inform epidemic control protocols on university campuses. In this study, we extracted four main metrics. First, the contact rate threshold among non-essential workers after accounting for the higher contact rate among essential workers, which could help inform the size of social circles at the individual-level and schedule group activities such as in labs and offices. Second, population size threshold, i.e., the maximum proportion of the actual population size, which could help university-level activity decisions such as the fraction of classes that should be moved to remote instructions. Third, the threshold values for vaccination coverage for the campus to return to normal, i.e., the minimum vaccination coverage for having 100% of the population back on campus, which would help plan for the period post introduction of vaccines. Fourth, the threshold values for population size under varying levels of vaccine coverage, which could help decisions in the event that vaccines are not widely available that coverage (proportion

vaccinated) is not at levels sufficient to fully resume normal activities. The fourth metric could especially be useful in the transitionary phase to normality (until vaccines become fully available) and where the results suggest lowering the population size by just a small number, which could be achieved by moving only a few classes online, such that, the overall population density on campus on any given day is lower but most students have most (if not all) of their classes as face-to-face.

While the implementation of the decisions related to the above metrics are driven at the university-level, adherence and feasibility to use of interventions such as face mask and physical distancing could vary by individual behaviors [36,38,39]. By separately modeling contact rates and transmission rates in this study, we extracted results corresponding to transmission rates (of 5% to 8%) that match reported behaviors for face mask use and physical distancing [11,30], and thus evaluated the university-level decisions under these adherence or feasibility ranges.

Our results suggest that, in the absence of vaccinations, at reported levels of face mask and physical distancing, testing alone without reducing population size would not be sufficient to control an outbreak. This suggests that, university campuses have high population densities that, for effective control of highly virulent infections such as SARS-CoV-2, it would require reducing the population size such as through remote learning. If, along with continuing face mask and physical distancing at current levels, population size is kept to at most 34% (or 44%) of actual population size, mass tests only of 25% (or 33%) per day would help control an outbreak. The choice between mass tests of 25% per day v. 33% per day should consider the costs of a greater proportion remote learning (quantitative and qualitative costs) v. costs of both

testing more often and testing a larger population. In the event that vaccines are available, the full population can be back on campus and resume normal activities provided at least 95% of the population is vaccinated. If vaccine coverages are lower than 95%, resuming normal activities with full population size would require additional asymptomatic testing. Mass tests of at least 25% per day would be sufficient if vaccine coverage is at least 70%, or mass tests of at least 33% per day would be sufficient if vaccine coverage is at least 59%. If vaccine coverage is below 59%, to control an outbreak, in addition to mass tests at 33% per day, it would also require lowering the population size to 90%, 75%, and 60%, if vaccine coverage is at 46%, 31%, and 16%, respectively.

In the absence of vaccinations, at reported levels of face mask and physical distancing, instead of mass tests only, trace and test only would also be sufficient at rates of 33% (or 50%) if population size is kept to at most 39% (or 52%). These population size range are close to the 34% (or 44%) reported above for 25% (or 33%) per day mass tests only. Trace and test of 33% and 50% correspond to 3 days and 2 days, respectively, from the time an infected person makes contact with an individual to effective isolation of that individual. Feasibility of this short turnaround times would determine the choice between use of mass test vs. trace and test. Turnaround times are expected to be shorter with digital contact tracing, such as smart phone apps, compared to manual tracing, and feasibility and adoption of apps could be higher among university students than general population. However, studies related to its feasibility and adoption followed by adherence to isolation, among other issues such as privacy and alternative digital technologies are only recently emerging [43–46]. Our results also suggest that, if these turnaround times are not achievable and further if there are any delays in trace and test initiation,

then trace and test alone is not favorable (none of the delayed trace and test were feasible (Fig 3)) and should instead adopt either mass tests only or mass test with trace and test. Use of mass test with trace and test could improve trace and test due to potential early diagnosis of index persons. Our results suggest that, if mass tests can increase trace and test to 50% (within two days from contact to isolation), there is more flexibility in trade-offs between mass test rates and contact rate thresholds, and thus more flexibility in population size and vaccine coverage thresholds (Fig 3).

Corresponding to the reported compliance to face mask and physical distancing (a transmission rate of 5% to 8% as per our estimations) and reported contact rates of 6 to 8 per person per day (a population size of 31% to 42% as per our estimations), from surveys [34,36,38] conducted over the year 2020 when universities transitioned a large proportion of classes to remote instructions, our results suggest the need for at least 33% mass test only or 33% trace and test only (Fig 4). Scenarios that did not meet these criteria led to exponential growths in infections. These results generally match observed cases over the Fall 2020 semester, where several campuses saw cases into the thousands within the first two weeks of opening and were able to rapidly control the spread within two to three weeks by temporarily transitioning to remote instructions [47]. While the universities were able to effectively control the outbreak quickly, it was also observed by this study [47] that the infections rapidly spread into the neighboring community, which were less successful in controlling the spread. Therefore, we believe, results obtained from our study by setting tight tolerances levels on infection cases, would be beneficial for informing future epidemic response plans that consider the interests of the broader community. Our results also suggest that, with asymptomatic testing only, it would be necessary to have a vaccination

coverage threshold of >95% for a university to fully return back to normal. This threshold is much higher than the typical 70% to 80% range used for herd-immunity in the literature for the general population [48], to a small extent because of setting a tighter tolerance but to a large extent because of the higher population density characteristic of university campuses. The latter can also be observed in R_0 values estimated for universities, which in some instances went above 10 even with online instructions [47], while the herd-immunity in the general population is approximately calculated as $1 - 1/R_0$ using a R_0 of 3.5.

Our work is subject to limitations. Our model is deterministic. We used an average contact rate for all persons, in order to estimate threshold values that could help inform university-level decisions. We did not model contact rates to be representative of actual expected networks between individuals. We did not explicitly model other interventions that could reduce transmission rate such as controlled ventilation, filtering air and controlling air flow, which are likely to impact transmissions [49]. The transmission rates also have a large range of uncertainty due to varying individual behaviors, the data used for streamlining the analyses in this study are based on limited data availabilities, however, the extrapolations over the wide range of transmission rates could be utilized. We did not model false positives for any of the testing scenarios and thus susceptible persons immediately return back to susceptible compartment after testing. We did not model other flu like illnesses and thus we did not assess the additional healthcare resource needs such as testing and quarantining because of similarity in symptoms with COVID-19. In estimation of vaccination thresholds, we did not consider the natural immunity developed among persons who may have been infected previously. The estimation of vaccination thresholds assume that the virus is still prevalent in the larger community and thus

there is a chance of the infection entering the population, such as through local or global travel. We assume that the population density is similar across university campuses with contact rates between 16 and 24, and thus, this assumption should be considered when generalizing to campuses.

In conclusion, the results from this study could be used to collectively inform decisions related to testing, population size reductions through remote instructions, size of social circles, personnel scheduling in labs and offices, under scenarios of both unavailability or partial availability of vaccines, and within the observed levels of compliance to face mask use and physical distancing. The analyses conducted here specifically streamlined the results to the COVID-19 disease caused by the SARS-CoV-2 virus. However, given the wide range of transmission rates evaluated here, which were based on results from a meta-analysis study that evaluated SARS-CoV-2 and other viruses of similarly high virulence [11], broader observations from this study could be extrapolated for use in early stages of new outbreaks of similar viral respiratory infections with similar incubation periods, [24] where non-pharmaceutical intervention options such as face masks, physical distancing, remote instructions, and testing are the suitable options. As was the case at the time of conducting this study, in the early stages of an outbreak, there is uncertainty in the baseline transmission rate, efficacy of face mask use and physical distancing [11]. Thus, the results over the range of transmission rates might only serve as a preliminary guide, until more information becomes available for more streamlined analyses.

Acknowledgements

We would like to acknowledge Sonza Singh, Shifali Bansal, Seyedeh Nazanin Khatami, and Arman Mohseni Kabir for their assistance in data collection in initial stages of the study, and Dr. Laura Balzer, Dr. Michael Ash, and Dr. Hari Balasubramanian for their comments and inputs.

References

1. Coronavirus Resource Center. Impact of opening and closing decisions by state. In: Johns Hopkins University of Medicine. [Internet]. 8 Jul 2020 [cited 8 Jul 2020]. Available: https://coronavirus.jhu.edu/data/state-timeline

2. Holzer J. The COVID-19 crisis: How do U.S. employment and health outcomes compare to other OECD countries? In: Brookings [Internet]. 2 Jun 2020 [cited 8 Jul 2020]. Available: https://www.brookings.edu/research/the-covid-19-crisis-how-do-u-s-economic-and-health-outcomes-compare-to-other-oecd-countries/

3. Blustein D, Duffy R, Ferreira J, Cohen-Scali V, Cinamon R, Allan B. Unemployment in the time of COVID-19: A research agenda. J Vocat Behav. 2020;119. doi:10.1016/j.jvb.2020.103436

4. CDC. How to Protect Yourself & Others. In: Centers for Disease Control and Prevention [Internet]. 24 Apr 2020 [cited 9 Jul 2020]. Available: https://www.cdc.gov/coronavirus/2019-ncov/prevent-getting-sick/prevention.html.

5. CDC. Interim Guidance for Businesses and Employers Responding to Coronavirus Disease 2019 (COVID-19). In: Centers for Disease Control and Prevention [Internet]. 6 May 2020 [cited 8 Jul 2020]. Available: https://www.cdc.gov/coronavirus/2019-ncov/community/guidance-business-response.html..

6. Barratt H, Kirwan M, Shantikumar S. Epidemic theory (effective & basic reproduction numbers, epidemic thresholds) & techniques for analysis of infectious disease data (construction & use of epidemic curves, generation numbers, exceptional reporting & identification of significant clusters). In: Health Knowledge [Internet]. [cited 8 Jul 2020]. Available: https://www.healthknowledge.org.uk/public-health-textbook/research-methods/1a-epidemiology/epidemic-theory

7. Kucharski A, Klepac P, Conlan A, Kissler S, Tang M, Fry H, et al. Effectiveness of isolation, testing, contact tracing, and physical distancing on reducing transmission of SARS-CoV-2 in different settings: a mathematical modelling study. Lancet Infect Dis. 2020;20: 1151–1160. doi:10.1016/S1473-3099(20)30457-6

8. He X, Lau EHY, Wu P, Deng X, Wang J, Hao X, et al. Temporal dynamics in viral shedding and transmissibility of COVID-19. Nat Med. 2020;26: 672–675. doi:10.1038/s41591-020-0869-5

9. Bedford J, Enria D, Giesecke J, Heymann DL, Ihekweazu C, Kobinger G, et al. COVID-19: towards controlling of a pandemic. The Lancet. 2020;395: 1015–1018. doi:10.1016/S0140-6736(20)30673-5

10. MacIntyre CR, Chughtai AA. A rapid systematic review of the efficacy of face masks and respirators against coronaviruses and other respiratory transmissible viruses for the community, healthcare workers and sick patients. International Journal of Nursing Studies. 2020;108: 103629. doi:10.1016/j.ijnurstu.2020.103629

11. Chu DK, Akl EA, Duda S, Solo K, Yaacoub S, Schünemann HJ, et al. Physical distancing, face masks, and eye protection to prevent person-to-person transmission of SARS-CoV-2 and COVID-19: a systematic review and meta-analysis. The Lancet. 2020;395: 1973–1987. doi:10.1016/S0140-6736(20)31142-9

12. Hellewell J, Abbott S, Gimma A, Bosse NI, Jarvis CI, Russell TW, et al. Feasibility of controlling COVID-19 outbreaks by isolation of cases and contacts. The Lancet Global Health. 2020;8: e488–e496. doi:10.1016/S2214-109X(20)30074-7

13. Aleta A, Martín-Corral D, Pastore y Piontti A, Ajelli M, Litvinova M, Chinazzi M, et al. Modelling the impact of testing, contact tracing and household quarantine on second waves of COVID-19. Nat Hum Behav. 2020;4: 964–971. doi:10.1038/s41562-020-0931-9

14. Gressman PT, Peck JR. Simulating COVID-19 in a University Environment. Mathematical Biosciences. 2020;328: 108436. doi:10.1016/j.mbs.2020.108436

15. Paltiel AD, Zheng A, Walensky RP. COVID-19 screening strategies that permit the safe re-opening of college campuses. Infectious Diseases (except HIV/AIDS); 2020 Jul. doi:10.1101/2020.07.06.20147702

16. Knowledge @ Wharton. COVID-19 on Campus: How Should Schools Be Redesigned? 22 Jun 2020 [cited 8 Jul 2020]. Available: https://knowledge.wharton.upenn.edu/article/how-should-universities-be-redesigned-in-the-wake-of-covid-19/

17. Vasquez M, Diep F. What Covid-19 Computer Models Are Telling Colleges About the Fall. In: The Chronicle of Higher Education [Internet]. 19 Jun 2020 [cited 8 Jul 2020]. Available: https://www.chronicle.com/article/What-Covid-19-Computer-Models/249027

18. Roos R. Masks plus hand hygiene reduced ILI in college dorm study. In: CIDRAP [Internet]. 22 Jan 2010 [cited 8 Jul 2020]. Available: https://www.cidrap.umn.edu/news-perspective/2010/01/masks-plus-hand-hygiene-reduced-ili-college-dorm-study

19. Aiello AE, Murray GF, Perez V, Coulborn RM, Davis BM, Uddin M, et al. Mask use, hand hygiene, and seasonal influenza-like illness among young adults: A randomized intervention trial. The Journal of Infectious Diseases. 2010;201: 491–498. doi:10.1086/650396

20. Meselson M. Droplets and Aerosols in the Transmission of SARS-CoV-2. N Engl J Med. 2020;382: 2063–2063. doi:10.1056/NEJMc2009324

21. Jayaweera M, Perera H, Gunawardana B, Manatunge J. Transmission of COVID-19 virus by droplets and aerosols: A critical review on the unresolved dichotomy. Environmental Research. 2020;188: 109819. doi:10.1016/j.envres.2020.109819

22. Anderson EL, Turnham P, Griffin JR, Clarke CC. Consideration of the Aerosol Transmission for COVID□19 and Public Health. Risk Analysis. 2020;40: 902–907. doi:10.1111/risa.13500

23. Zhang Y, Jiang B, Yuan J, Tao Y. The impact of social distancing and epicenter lockdown on the COVID-19 epidemic in mainland China: A data-driven SEIQR model study. MedRxiv. 2020. doi:https://doi.org/10.1101/2020.03.04.20031187

24. Lessler J, Reich NG, Brookmeyer R, Perl TM, Nelson KE, Cummings DA. Incubation periods of acute respiratory viral infections: a systematic review. The Lancet Infectious Diseases. 2009;9: 291–300. doi:10.1016/S1473-3099(09)70069-6

25. Hill A, Levy M, Xie S, Sheen J, Shinnick J, Gheorghe A, et al. Modeling COVID-19 Spread vs Healthcare Capacit. 27 May 2020. Available: https://alhill.shinyapps.io/COVID19seir/

26. Ma S, Zhang J, Zeng M, Yun Q, Guo W, Zheng Y, et al. Epidemiological parameters of coronavirus disease 2019: a pooled analysis of publicly reported individual data of 1155 cases from seven countries. Infectious Diseases (except HIV/AIDS); 2020 Mar. doi:10.1101/2020.03.21.20040329

27. CDC. COVID-19 Pandemic Planning Scenarios. In: Centers for Disease Control and Prevention [Internet]. [cited 5 May 2021]. Available: https://www.cdc.gov/coronavirus/2019-ncov/hcp/planning-scenarios-archive/planning-scenarios-2020-05-20.pdf

28. MIDAS 2019 Novel Coronavirus Repository. [cited 24 Apr 2020]. Available: https://github.com/midas-network/COVID-19

29. Kobokovich A, West R, Gronvall G. Serology-based tests for COVID-19. In: Johns Hopkins Bloomberg School of Public Health, Center for Healthy Security [Internet]. 7 Jul 2020 [cited 8 Jul 2020]. Available: https://www.centerforhealthsecurity.org/resources/COVID-19/serology/Serology-based-tests-for-COVID-19.html

30. Zhao PJ. A Social Network Model of the COVID-19 Pandemic. Epidemiology; 2020 Mar. doi:10.1101/2020.03.23.20041798

31. At a glance, 2019-2020, University of Massachusetts, Amherst. [cited 9 Jun 2020]. Available: https://www.umass.edu/oir/sites/default/files/publications/glance/FS_gla_01.pdf

32. ACS DEMOGRAPHIC AND HOUSING ESTIMATES. In: United States Census Bureau [Internet]. [cited 5 May 2021]. Available: https://data.census.gov/cedsci/table?q=Profile%20of%20General%20Population%20and%20Housing%20Characteristics%20amherst%20massachusetts&tid=ACSDP5Y2019.DP05

33. Ritchie H, Ortiz-Ospina E, Beltekian D, Mathieu E, Hasell J, Macdonald B, et al. Mortality Risk of COVID-19. In: Our World in Data [Internet]. [cited 5 May 2020]. Available: https://ourworldindata.org/mortality-risk-covid#the-case-fatality-rate

34. Nixon E, Trickey A, Christensen H, Finn A, Thomas A, Relton C, et al. Contacts and behaviours of university students during the COVID-19 pandemic at the start of the 2020/21 academic year. Public and Global Health; 2020 Dec. doi:10.1101/2020.12.09.20246421

35. Cashore J, Duan N, Janmohamed A, Wan J, Zhang Y, Henderson S. COVID-19 Mathematical Modeling for Cornell's Fall Semester. 2020. Available: https://cpb-us-w2.wpmucdn.com/sites.coecis.cornell.edu/dist/3/341/files/2020/10/COVID_19_Modeling_Jun15-VD.pdf

36. Cohen AK, Hoyt LT, Dull B. A Descriptive Study of COVID-19–Related Experiences and Perspectives of a National Sample of College Students in Spring 2020. Journal of Adolescent Health. 2020;67: 369–375. doi:10.1016/j.jadohealth.2020.06.009

37. Brooks-Pollock E, Christensen H, Trickey A, Hemani G, Nixon E, Thomas A, et al. High COVID-19 transmission potential associated with re-opening universities can be mitigated with layered interventions. Infectious Diseases (except HIV/AIDS); 2020 Sep. doi:10.1101/2020.09.10.20189696

38. COVID-19 Mitigation Behavior Survey Results. In: Kansas State University [Internet]. [cited 26 Apr 2020]. Available: https://www.k-state.edu/covid-19/communications/every-wildcat-a-wellcat/fall-2020-mitigation-behavior-survey-results.html

39. COVID-19 Reopening Survey Data. In: Risk and Social Policy Group [Internet]. [cited 26 Apr 2020]. Available: https://static1.squarespace.com/static/5ec4464f22cd13186530a36f/t/5ef0e413c14aa311f58404fe/1592845331607/FINAL_onepager_wave1.pdf

40. Hu H, Nigmatulina K, Eckhoff P. The scaling of contact rates with population density for the infectious disease models. Mathematical Biosciences. 2013;244: 125–134. doi:10.1016/j.mbs.2013.04.013

41. Danon L, House TA, Read JM, Keeling MJ. Social encounter networks: collective properties and disease transmission. J R Soc Interface. 2012;9: 2826–2833. doi:10.1098/rsif.2012.0357

42. Beutels P, Shkedy Z, Aerts M, Van Damme P. Social mixing patterns for transmission models of close contact infections: exploring self-evaluation and diary-based data collection through a web-based interface. Epidemiol Infect. 2006;134: 1158–1166. doi:10.1017/S0950268806006418

43. Menges D, Aschmann H, Moser A, Althaus CL, von Wyl V. The role of the SwissCovid digital proximity tracing app during the pandemic response: results for the Canton of Zurich. Infectious Diseases (except HIV/AIDS); 2021 Feb. doi:10.1101/2021.02.01.21250972

44. Colizza V, Grill E, Mikolajczyk R, Cattuto C, Kucharski A, Riley S, et al. Time to evaluate COVID-19 contact-tracing apps. Nat Med. 2021;27: 361–362. doi:10.1038/s41591-021-01236-6

45. Lewis D. Contact-tracing apps help reduce COVID infections, data suggest. In: Nature [Internet]. 21 Feb 2021 [cited 1 May 2021]. Available: https://www.nature.com/articles/d41586-021-00451-y

46. Masel J, Shilen A, Helming B, Rutschman J, Windham G, Judd M, et al. Quantifying meaningful adoption of a SARS-CoV-2 exposure notification app on the campus of the University of Arizona. Epidemiology; 2021 Feb. doi:10.1101/2021.02.02.21251022

47. Lu H, Weintz C, Pace J, Indana D, Linka K, Kuhl E. Are college campuses superspreaders? A data-driven modeling study. Computer Methods in Biomechanics and Biomedical Engineering. 2021; 1–11. doi:10.1080/10255842.2020.1869221

48. Aschwanden C. Five reasons why COVID herd immunity is probably impossible. In: Nature [Internet]. 18 Mar 2021 [cited 1 May 2021]. Available: https://www.nature.com/articles/d41586-021-00728-2

49. Dai H, Zhao B. Association of the infection probability of COVID-19 with ventilation rates in confined spaces. Build Simul. 2020;13: 1321–1327. doi:10.1007/s12273-020-0703-5

Fig 1 (A)

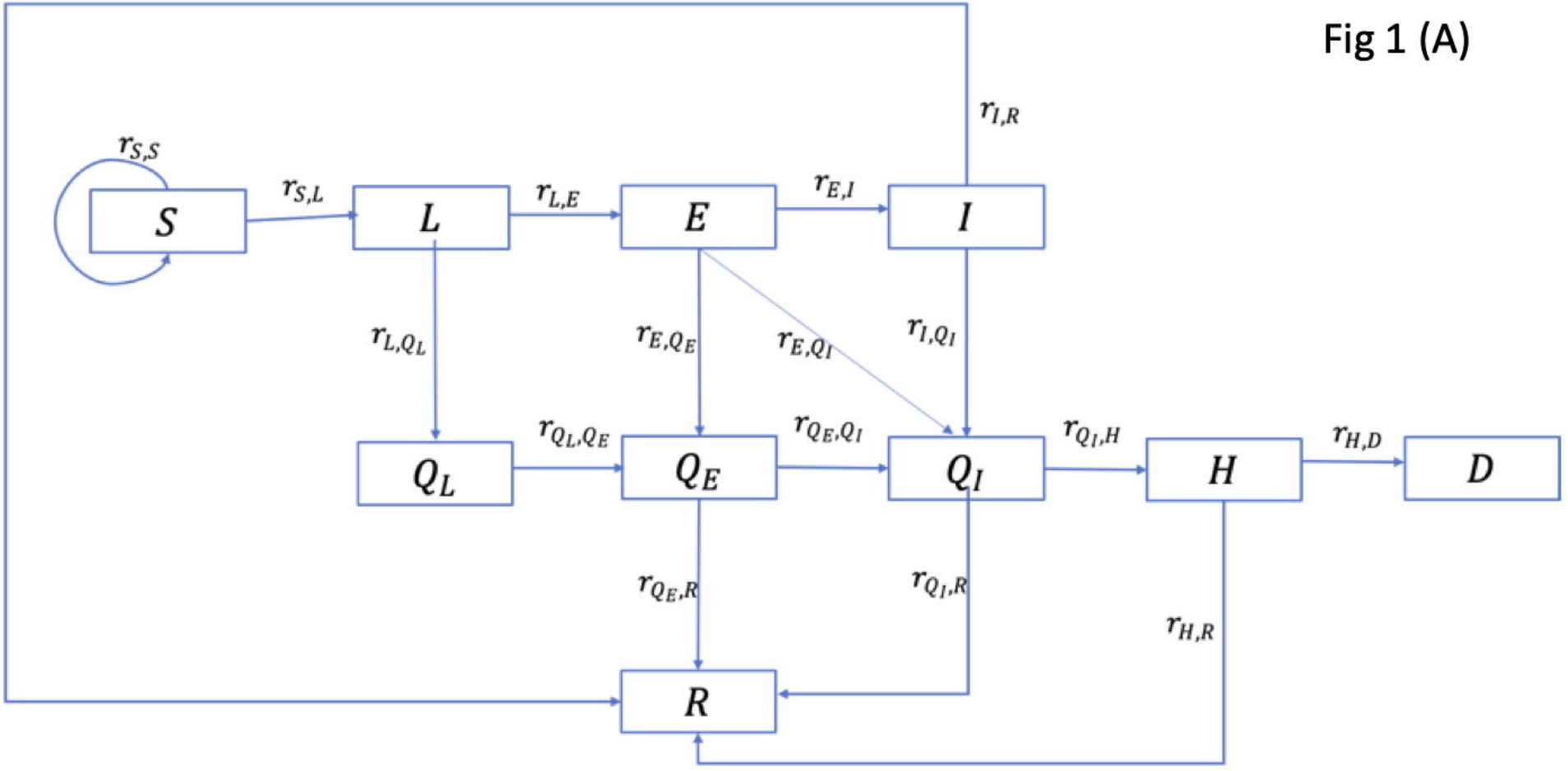
$r_{S,S}$
S
$r_{S,L}$
L
$r_{L,E}$
E
$r_{E,I}$
I
$r_{I,R}$
r_{L,Q_L}
r_{E,Q_E}
r_{E,Q_I}
r_{I,Q_I}
Q_L
r_{Q_L,Q_E}
Q_E
r_{Q_E,Q_I}
Q_I
$r_{Q_I,H}$
H
$r_{H,D}$
D
$r_{Q_E,R}$
$r_{Q_I,R}$
$r_{H,R}$
R

Fig 1 (B)

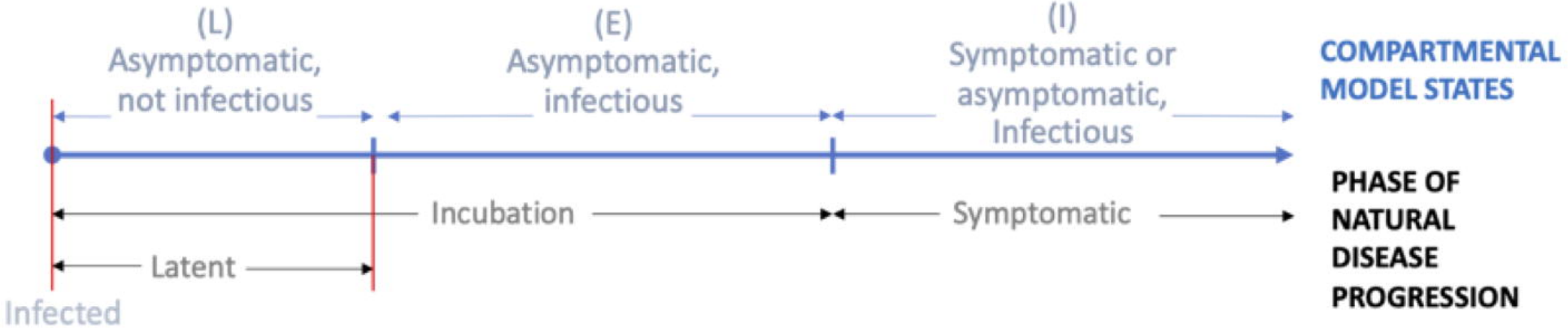
(L)
Asymptomatic,
not infectious
(E)
Asymptomatic,
infectious
(I)
Symptomatic or
asymptomatic,
Infectious
COMPARTMENTAL
MODEL STATES
Incubation
Symptomatic
Latent
Infected
PHASE OF
NATURAL
DISEASE
PROGRESSION

Tolerance	Testing	Contact rate threshold (per day)† for non-essential workers after accounting for higher contact rate among essential workers ‡		Population size †(if regular contact rate is 16)		Population size †(if regular contact rate is 24)		Vaccination coverage † (if regular contact rate is 16)		Vaccination coverage † (if regular contact rate is 24)		Peak trace and tests per day (per 10,000 persons)		Peak quarantine per day (per 10,000 persons)	
	Transmission rate (p)--> estimated based on reported use of face mask and physical distancing [11,30]	5%	8%	5%	8%	5%	8%	5%	8%	5%	8%	5%	8%	5%	8%
Relaxed tolerance	S+25%U	6	2	50	31	33	21	53	72	70	83	0	0	7	6
	S+33%U	9	5	63	44	42	29	39	59	61	75	0	0	7	7
	S+33%T	8	4	56	38	38	25	46	66	66	79	21	14	18	18
	S+50%T	11	6	75	50	50	33	26	53	53	70	55	36	23	22
	S+5%U+50%T	16	10	100	69	67	46	0	33	35	57	48	33	20	20
	S+10%U+50%T	18	11	100	75	75	50	0	26	26	53	35	24	15	15
	S+20%U+50%T	22	15	100	94	92	63	0	7	9	39	25	16	13	13
	S+25%U+50%T	24	16	100	100	100	67	0	0	0	35	20	14	12	13
	S+33%U+50%T	25	18	100	100	100	75	0	0	0	26	15	12	9	10
	S+5%U+50%dT	9	4	63	38	42	25	39	66	61	79	55	36	25	21
	S+10%U+50%dT	13	6	81	50	54	33	20	53	48	70	63	32	25	21
	S+20%U+50%dT	18	11	100	75	75	50	0	26	26	53	54	36	21	21
	S+25%U+50%dT	19	13	100	81	79	54	0	20	22	48	41	28	18	19
	S+33%U+50%dT	23	15	100	94	96	63	0	7	4	39	33	21	18	16
Medium tolerance	S+5%U+50%T	5	2	44	31	29	21	59	72	75	83	9	8	6	6
	S+10%U+50%T	8	4	56	38	38	25	46	66	66	79	11	7	6	6
	S+20%U+50%T	10	5	69	44	46	29	33	59	57	75	7	4	5	5
	S+25%U+50%T	11	6	75	50	50	33	26	53	53	70	6	4	5	4
	S+33%U+50%T	14	8	88	56	58	38	13	46	44	66	6	3	5	5
	S+20%U+50%dT	5	2	44	31	29	21	59	72	75	83	4	4	6	6
	S+25%U+50%dT	6	4	50	38	33	25	53	66	70	79	4	4	5	6
	S+33%U+50%dT	9	5	63	44	42	29	39	59	61	75	4	3	5	6
Tight tolerance	No scenarios were feasible ‽														

Testing	Vaccination coverage		Population size (if regular contact rate is 16)		Population size (if regular contact rate is 24)	
Transmission rate (p)--> estimated based on reported use of face mask and physical distancing [11,30]	5%	8%	5%	8%	5%	8%
S	95	100	100	100	100	100
Mass tests only (% tested per day)						
S+5%U	89	95	100	100	100	100
S+10% U	84	89	100	100	100	100
S+20%U	74	84	100	100	100	100
S+25%U	63	79	100	100	100	100
S+33%U	53	68	100	100	100	100
S+33%U	38	53	100	97	79	83
S+33%U	23	38	85	82	64	68
S+33%U	8	23	70	67	49	53
Trace and tests only						
S+10%T	84	95	100	100	100	100
S+17%T	79	89	100	100	100	100
S+20%T	74	84	100	100	100	100
S+25%T	68	84	100	100	100	100
S+33%T	58	74	100	100	100	100
S+50%T	42	63	100	100	100	100
S+50%T	27	42	100	92	77	75
S+50%T	12	27	87	77	62	60
Trace and tests only (capped at 20%)						
S+10%T	84	95	100	100	100	100
S+17%T	79	89	100	100	100	100
S+20%T	74	84	100	100	100	100
S+20%T	59	69	96	94	84	86
S+20%T	44	54	81	79	69	71
S+20%T	29	39	66	64	54	56
S+20%T	14	24	51	49	39	41

Contact rate (per person per day)	Testing	Number infected (per 10,000 persons)		Peak trace and tests per day (per 10,000 persons)		Peak quarantine per day (per 10,000 persons)	
	Transmission rate (p)--> estimated based on reported use of face mask and physical distancing [11,30]	5%	8%	5%	8%	5%	8%
6 to 8 (remote instructions)†	S+33%U	23 (20, 27)	44 (32, 67)	0 (0, 0)	0 (0, 0)	4 (3, 5)	7 (5, 13)
	S+33%T	30 (25, 36)	60 (42, 89)	14 (9, 17)	22 (14, 28)	12 (9, 14)	24 (18, 33)
	S+50%T	23 (21, 26)	34 (29, 41)	20 (12, 24)	29 (19, 36)	10 (9, 13)	18 (14, 22)
	S+5%U+50%T	19 (17, 21)	25 (22, 29)	8 (7, 13)	16 (10, 19)	6 (5, 7)	9 (8, 12)
	S+10%U+50%T	17 (16, 19)	22 (20, 24)	6 (5, 9)	8 (7, 10)	5 (4, 5)	7 (6, 8)
	S+20%U+50%T	16 (15, 16)	19 (18, 21)	4 (3, 4)	4 (4, 5)	4 (3, 4)	5 (4, 5)
	S+25%U+50%T	15 (15, 16)	18 (17, 20)	3 (2, 4)	3 (3, 3)	3 (3, 4)	4 (4, 4)
	S+33%U+50%T	15 (14, 16)	17 (16, 18)	2 (2, 2)	2 (2, 3)	3 (3, 3)	4 (3, 4)
	S+5%U+50%dT	30 (26, 34)	45 (38, 55)	26 (16, 32)	46 (36, 64)	15 (12, 18)	26 (21, 34)
	S+10%U+50%dT	24 (22, 27)	34 (29, 40)	11 (9, 18)	24 (15, 32)	10 (8, 12)	17 (14, 21)
	S+20%U+50%dT	19 (18, 21)	25 (22, 28)	4 (3, 8)	10 (6, 10)	6 (5, 7)	9 (8, 11)
	S+25%U+50%dT	18 (17, 19)	22 (20, 25)	3 (3, 3)	6 (4, 8)	5 (5, 5)	7 (6, 9)
	S+33%U+50%dT	17 (16, 17)	19 (18, 22)	2 (2, 2)	3 (2, 6)	4 (4, 4)	6 (5, 7)
16 to 24 (regular face to face instructions)‡	None of the scenarios were suitable ‖						