Threshold analyses on rates of testing, transmission, and contact for COVID-19 control in a university setting

Xinmeng Zhao[⁋1], Hanisha Tatapudi[⁋1], George Corey[2], and *Chaitra Gopalappa[1]

[1]Department of Mechanical and Industrial Engineering, University of Massachusetts Amherst, MA, USA

[2] University Health Services, University of Massachusetts Amherst, MA, USA

*Corresponding author:

e-mail: chaitrag@umass.edu

[⁋] These authors contributed equally to this work

Abstract

We simulated epidemic projections of a potential COVID-19 outbreak in a university population of 38,000 persons, under varying combinations of mass test rate (0% to 10%), contact trace and test rate (0% to 50%), transmission rate (probability of transmission per contact per day), and contact rate (number of contacts per person per day). We simulated four levels of transmission rate, 14% (average baseline), 8% (average for face mask use), 5.4% (average for 3ft distancing), and 2.5% (average for 6ft distancing and face mask use), interpolating results to the full range to understand the impact of uncertainty in effectiveness, feasibility, and adherence of face mask use and physical distancing. We evaluated contact rates between 1 and 25, to identify the threshold that, if exceeded, could lead to several deaths.

When transmission rate was 8%, for trace and test at 50%, the contact rate threshold was 8. However, any time delays in trace, test, and isolation quickly raised the number of deaths. Keeping contact rate to 3 or below was more robust to testing delays, keeping deaths below 1 up to a delay of 5 days from the time of infection to diagnosis and isolation. For a contact rate of 3, the number of trace and tests peaked to about 70 per day and relaxed to 25 with the addition of 10% mass test. When transmission rate was 5.4%, for trace and test at 50%, the contact rate threshold was 10. However, keeping contact rate to 4 or below was more robust to delays in testing, keeping deaths below 1 up to a delay of 6 days from the time of infection to diagnosis and isolation. For contact rate of 4, the number of trace and tests peaked at 50 per day and relaxed to 10 per day with the addition of 10% mass test.

Threshold estimates can help develop on-campus scheduling and indoor-spacing plans in conjunction with plans for asymptomatic testing for COVID-19. Combination thresholds should be selected specific to the setting based on an assessment of the feasibility and resource availability for testing and quarantine.

Introduction

The COVID-19 pandemic caused by the SARS-CoV-2 virus has caused significant disease and economic burdens since its first outbreak in December 2019. In the absence of an effective vaccine, the main intervention for the prevention of COVID-19 transmissions has been social distancing. The most effective social distancing being lockdowns of non-essential organizations and services, as adopted by several states since March, 2020, in efforts to immediately slow down the pandemic [1]. However, lockdowns are a huge threat to the economic stability of a nation as seen by the unprecedented rise in unemployment rates [2] [3]. Therefore, while lockdowns are a good short-term strategy, for a long-term strategy or until a vaccine becomes widely available, it has become necessary to identify alternate strategies and lifestyles that control the disease burden while minimizing the economic burden. Interventions that are effective include the use of face masks, physical distancing between persons at a recommended 6ft, and contact tracing and testing or mass testing to enable early diagnosis in the asymptomatic stage of infection [4]. However, removal of lockdowns should be strictly accompanied by a reopening plan that rapidly and efficiently enables the adoption of the above interventions, to avoid an epidemic rebound. In addition to public health agencies, all members of a community, in both public and private sectors, play a key role in the development and implementation of a reopening plan that is most suited for their organization [5]. Among these sectors, universities and colleges bear a special burden to develop a reopening plan that include changes to a range of activities related to teaching, research, dining, housing, and extra-curricular activities [6].

We developed a compartmental differential equations model to simulate epidemic projections of a potential COVID-19 outbreak in a population of 38,000 individuals representative of

undergraduate and graduate students, faculty and staff in a residential university in the United States. We simulated epidemic projections, of potential outbreaks, under varying combinations of contact tracing and testing and mass testing, to identify combinations that would reduce the effective reproduction number R_e to a value below the epidemic threshold of 1. R_e is directly proportional to the duration of infectiousness, transmission rate (the probability of transmission per contact per day, representing the infectiousness of the virus), and contact rate (the number of contacts per person per day) [7]. Trace and test and universal mass test lead to early diagnosis in the asymptomatic phase of the infection and, if persons diagnosed with infection are successfully quarantined, they reduce the duration of exposed infectiousness [8] [9] [10] and thus reduce R_e. Physical distancing by the recommended 6ft and use of face masks can reduce transmission rate, and thus reduce R_e [11] [12]. Reducing contact rate directly reduces R_e, however, the expected contact rates are dependent on the planned facility layout and scheduling of classrooms, housing, dining, research labs, and offices.

While COVID-19 simulation models have typically used a product of transmission rate and contact rate as one metric, we evaluate these separately, as it could help inform scheduling and facility layout decisions. While physical distancing by the recommended 6ft and use of face masks can reduce transmission rate, there is considerable uncertainty in the expected reduction, with studies showing that it is likely to be less than 100% even if used properly [11] [12] [13] [14] . That is, a person who is at a six feet distance is also a contact for potential transmission, although the transmission rate (per contact) would be low. Therefore, if not properly planned, the movement of students between multiple indoor locations, such as shared student housing or dorms, classrooms, dining halls, and shared research lab and office spaces, could create a high

contact rate, even in the absence of large social gatherings. This can be further exacerbated by the ease of transmission of the virus. While it is known that indoor gatherings such as events, bars, and restaurants have contributed to a significant portion of the cases [9] [15] [16] [17], its attribution to confined spaces and transmission through droplets alone has been shifting. Specifically, there is growing consensus among researchers that the mode of virus transmissions not only include air droplets (typically created during heavy breathing such as singing or exercising) and to some degree environmental (surfaces of items), but also aerosols, i.e., even normal nasal breathing and talking can transmit the virus, and thus a physical distancing of 6ft alone maybe insufficient [17] [18] [19] [20] [21] [22]. While controlling ventilation through proper air flow and use of filters, mandating both face masks and 6ft distancing, and regular cleaning and hygiene can reduce transmissions, its feasibility and compliance at all times are less certain. Under this context of less than 100% effectiveness, feasibility, and compliance of physical distancing and face masks, while it is clear that high contact rates should be avoided, the impact of combinations of contact rates and transmission rate (the latter defining the level of physical distancing and face mask use) on epidemic growth under the varying levels of testing, have not been evaluated.

For the reopening of United States, many organizations follow the guidance from the government to understand when to lift intervention policies. On April 16, 2020, the White House released the plan for a phased reopening of the United States [23] [24]. In this plan, educational institutions in the U.S. such as schools and universities can reopen in Phase Two. Phase Two reopening for any state is met if there is no evidence of a rebound and the statesatisfies certain gating criteria (such as downward trajectory of influenza like illness (ILI), documented cases,

treatment of all patients under crisis care, among others) a second time. The first time, the gating criteria need to be satisfied before the reopening of Phase One. In the literature, there are several studies that have examined the impact of school closures and stay at home policies. In the past, some of these studies examined the impact of policies during the H1N1 pandemic [25] [26]. However, these studies targeted closure of schools or several classes in a school for certain periods of time and do not explore partial re-opening or closure [25] [26] [27]. In more recent times, a Johns Hopkins study provided an ethical framework for the COVID-19 reopening process [28]. This framework is intended for policy makers on the state level to develop plans for reopening of their state. In the framework, they highlight the long-term closure of schools can have a detrimental effect on children but warns policy makers to not shy away from re-imposing social distancing measures if hospitalizations or cases cross over a benchmark. A literature review on school closure policies states that policy makers need to strongly consider combinations of social distancing policies when planning to reopen [29]. One study examined the impact of social distancing, contact tracing and household quarantine in a Boston metropolitan area [30]. They tested the effectiveness of these policies to avoid a second wave of the pandemic using a granular agent-based model. In our search, we found only one study that researched the impact of school closure policies during the COVID-19 pandemic for K-12 schools [31]. In this study, the authors study the impact of partial, complete and progressive reopening of schools. They also study social distancing interventions, testing, and isolation, and estimate hospital bed capacity needs if schools were to be reopened.

While it is generally known that increasing contact tracing and testing is necessary, studies directly observing the number of tests needed at an organizational level, such as university, are

only recently emerging. One study analyzing combination interventions, in generalized populations, that include contact tracing estimated that reducing $R_0$of 1.5 to an R_e of 1 requires more than 20% of contact tracing [32]. For an R_0 of 2.5, at least 80% of contact tracing and for an $R_0$of 3.5, more than 100% of contact tracing. A modeling study applied to the Boston area [30] estimated that the best way out scenario is a Lift and Enhanced Testing (LET) with 50% detection and 40% tracing. According to this, the number of individuals that need to be traced per 1000 persons is below 0.1 under partial reopening and below 0.15 under total reopening. Models for a university are only recently emerging, [33] [34] [35] [36] but none have, thus far, explicitly evaluated the combinations of contact rate and transmission rate.

In this work, we evaluate different combinations of trace and test rate, mass test rate, and transmission rate, for a range of contact rates, to identify the threshold contact rate that if exceeded can lead to several deaths. We also identify the number of trace and tests, quarantines, hospitalizations, and deaths under each intervention combination. These metrics could collectively help inform development of a preparedness plan for reopening of a University. Contact rates can help plan indoor spacing and personnel scheduling of classrooms, labs and office spaces, housing, and dining. Though off-campus contact rates cannot be controlled, an understanding of the threshold contact rates can help eliminate indoor planning scenarios that most certainly lead to an epidemic. The threshold contact rates can only help in elimination and should not be used as a metric for selection of a strategy. Selection of a scenario should be done after a feasibility assessment. The estimates for number of tests and quarantines, along with the uncertainty in the transmission rates, under each scenario, could help in the feasibility assessment, based on the resource needs such as personnel, equipment, and infrastructure, and

feasibility in implementation of physical distancing and face mask use under the chosen transmission rates.

Methodology

Simulation methodology

We developed a compartmental model for simulating epidemic projections overtime. The epidemic flow diagram is depicted in Figure 1. Each box is an epidemic state, and each arrow represents a transition from one state to another. Note, each compartment is further split by age and gender, but for clarity of notations, we do not include it in the equations below.

Let $\pi_{t+1} = [\mathrm{S}, \mathrm{L}, \mathrm{E}, \mathrm{I}, \mathrm{Q_L}, \mathrm{Q_E}, \mathrm{Q_I}, \mathrm{H}, \mathrm{R}, \mathrm{D}]$ be a vector, with each element representing the number of people in a compartment at time $t + 1$, where,

S = the number **Susceptible**,

L = the number exposed and not infectious (**Latent stage)** (asymptomatic),

E = the number **Exposed and infectious** (asymptomatic),

I = the number **Infectious** (symptomatic and infectious),

Q_L = the number exposed and not infectious (**Latent) and Quarantined** (diagnosed),

Q_E = the number **Exposed and infectious and Quarantined** diagnosed),

Q_I = the number **Infectious and Quarantined** (diagnosed),

H = the number **Hospitalized**,

R = the number **Recovered**, and

D = the number **Deaths.**

Let,

p= transmission rate (probability of transmission per contact per day)

c= contact rate (number of contacts per person per day)

N= total population who are alive,

a_B = symptom-based testing rate,

$a_{C,t}$ = rate of testing through contact tracing at time t,

$a_{U,t}$ = rate of testing through universal testing at time t,

$days_L$ = duration in latent period,

$days_{incub}$ = duration in incubation period,

$days_{IR}$ = time from onset of symptoms to recovery,

$days_{Q_IR}$ = time from diagnosis to recovery,

$days_{Q_IH}$ = time from diagnosis to hospitalization,

$days_{HR}$ = time from hospitalization to recovery,

$days_{HD}$ = time from hospitalization to death,

$prop_{asymp}$ = proportion asymptomatic,

$prop_{hosp}$ = proportion hospitalized, and

$prop_{severe}$ = proportion of cases that are severe.

Then, we can write the equations for transition rates (arrows in Figure 1) as follows:

$r_{S,L} = \frac{pc(E+I)}{N}$, which assumes that only infected persons in E and I can transmit, persons in Q_E and Q_I self-quarantine, and persons in L and Q_L are not infectious. $r_{L,E} = \frac{1}{days_L}$

$r_{E,Q_I} = \frac{(prop_{severe})(1-prop_{asymp})}{days_{incub}-days_L}$, which assumes that only a proportion of cases that are severe ($prop_{severe}$) get diagnosed immediately because of exhibition of symptoms, we

use the proportion hospitalized as a proxy for severe cases; the denominator is based on the assumption that the duration of exposed phase is equal to the difference between the duration of the incubation period and the latent period.

$r_{E,I} = \frac{(1-prop_{severe})(1-prop_{asymp})}{days_{incub}-days_L}$, which follows from above.

$r_{I,Q_I} = a_B$, which assumes that under symptom-based testing, only persons who show moderate to severe symptoms get diagnosed and those who show mild symptoms do not.

$r_{Q_I,H} = \frac{prop_{hosp}}{days_{Q_I H}}$, for $prop_{hosp}$ we use the proportion of persons hospitalized among those diagnosed through symptom-based testing.

$r_{L,Q_L} = a_{U,t} + (1 - a_{U,t})a_{C,t}$, which assumes that under the implementation of both universal testing and contact tracing and testing, persons diagnosed through universal testing will not be tested again through contact tracing.

$r_{E,Q_E} = a_{U,t} + (1 - a_{U,t})a_{C,t}$, which is similar to above.

$r_{E,R} = \frac{prop_{asymp}}{days_{incub}-days_L}$, which assumes that a certain proportion of persons ($prop_{asymp}$) never show symptoms and thus directly go from exposed to recovered.

$r_{I,R} = (1 - a_B)[a_{U,t} + (1 - a_{U,t})a_{C,t}] + \frac{1}{days_{IR}}$, which assumes that person with mild cases that did not get diagnosed through symptom-based testing have a chance of getting tested through additional testing options, and self-quarantine upon diagnosis.

$r_{Q_L,Q_E} = \frac{1}{days_L}$

$r_{Q_E,Q_I} = \frac{[a_B(1 - prop_{severe}) + (prop_{severe})](1 - prop_{asymp})}{days_{incub}-days_L}$, theoretically, r_{Q_E,Q_I} should be the same as $r_{E,I}$, however, as the rate of transitioning from Q_I to H is fixed to proportion hospitalized under symptom-based tests, if extensive testing is conducted, the number of

persons in Q_I would increase thus incorrectly inflating the number of persons who are hospitalized; To avoid this, we modified the equation to consider the number of persons flowing into $Q_I$would be equal to the proportion flowing from I to Q_I under symptom-based testing.

$r_{Q_{E,}R} = \frac{(1-[a_B(1-prop_{severe})+(prop_{hosp})])(1-prop_{asymp})}{days_{incub}-days_L}$, which follows from the above equation.

$$r_{Q_I,R} = \frac{1-prop_{hosp}}{days_{Q_IR}}$$

$$r_{H,R} = \frac{prop_{recover}}{days_{HR}}$$

$$r_{H,D} = \frac{(1-prop_{recover})}{days_{HD}}$$

We simulate the epidemic over time using the following system of differential equations

$$\pi_{t+1} = \pi_t + \pi_t Q_t . dt$$

where, Q_t = a matrix of transition rates between states (arrows in Figure 1), and dt= time-step. We use a time-unit of per day for the transition rates in Q_t and set $dt = \frac{1}{10}$, and thus, the model simulates every 10th of a day.

The expansion of the system of differential equations are as follows:

$$S_{t+1} = S_t + (-r_{S,L}S_t)\, dt$$

$$L_{t+1} = L_t + (r_{S,L}S_t - (r_{L,E} + r_{L,Q_L})L_t)\, dt$$

$$E_{t+1} = E_t + (r_{L,E}\, L_t - (r_{E,I} + r_{E,Q_E} + r_{E,Q_I} + r_{E,R})E_t)\, dt$$

$$I_{t+1} = I_t + (r_{E,I}\, E_t - (r_{I,Q_I} + r_{I,R})I_t)\, dt$$

$$Q_{L,t+1} = Q_{L,t} + (r_{L,Q_L}\, L_t - (r_{Q_L,Q_E})Q_{L,t})\, dt$$

$$Q_{E,t+1} = Q_{E,t} + (r_{E,Q_E}\, E_t - (r_{Q_E,Q_I} + r_{Q_E,R})Q_{E,t})\, dt$$

$$Q_{I,t+1} = Q_{I,t} + \left((r_{E,Q_I}\, E_t + r_{Q_E,Q_I}\, Q_{E,t} + r_{I,Q_I} I_t) \; - \left(r_{Q_I,H} + r_{Q_I,R}\right) Q_{I,t}\right) dt$$

$$H_{t+1} = H_t + \left(r_{Q_I,H} Q_{I,t} - \left(r_{H,R} + r_{H,D}\right) H_t\right) dt$$

$$\mathrm{R}_{t+1} = R_t + (\, r_{E,R} E_t + r_{Q_E,R} Q_{E,t} + r_{Q_I,R} Q_{I,t} + r_{I,R} I_t + r_{H,R} H_t)\, dt$$

$$D_{t+1} = D_t + r_{H,D} H_t dt$$

We can further expand by substitution of the rate terms with their equations as follows:

$$S_{t+1} = \; S_t + \left(-\frac{pc(E \; + \; I)}{N}\right) S_t dt$$

$$L_{t+1} = L_t + \left(\frac{pc(E \; + \; I)}{N} S_t - \left(\frac{1}{days_L} + a_{U,t} + \left(1 - a_{U,t}\right) a_{C,t}\right) L_t\right) \; dt$$

$$E_{t+1} = E_t + \left(\frac{1}{days_L} L_t \right.$$

$$- \left(\frac{(1 - prop_{severe})\left(1 - prop_{asymp}\right)}{days_{incub} - days_L} + (a_{U,t} + \left(1 - a_{U,t}\right) a_{C,t})\right.$$

$$\left. + \frac{(prop_{severe})\left(1 - prop_{asymp}\right)}{days_{incub} - days_L} + \frac{prop_{asymp}}{days_{incub} - days_L}\right) E_t\Bigg) \; dt$$

$$I_{t+1} = I_t + \left(\frac{(1 - prop_{severe})\left(1 - prop_{asymp}\right)}{days_{incub} - days_L}\; E_t - \left(a_B + (a_{U,t} + \left(1 - a_{U,t}\right) a_{C,t} + \frac{1}{days_{IR}})\right) I_t\right) dt$$

$$Q_{L,t+1} = Q_{L,t} + \left((a_{U,t} + \left(1 - a_{U,t}\right) a_{C,t})\; L_t - \left(\frac{1}{days_L}\right) Q_{L,t}\right) \; dt$$

$$Q_{E,t+1} = Q_{E,t} + \left((a_{U,t} + \left(1 - a_{U,t}\right) a_{C,t})\; E_t \right.$$

$$- \left(\frac{[a_B(1 \; - \; prop_{severe}) + \; (prop_{severe})]\left(1 \; - \; prop_{asymp}\right)}{days_{incub} - days_L}\right.$$

$$\left. + \; \frac{1 - prop_{hosp}}{days_{Q_I R}}\right) Q_{E,t}\Bigg) \; dt$$

$$Q_{I,t+1} = Q_{I,t} + \left(\frac{(prop_{severe})(1 - prop_{asymp})}{days_{incub} - days_L} E_t \right.$$

$$+ \frac{[a_B(1 - prop_{severe}) + (prop_{severe})](1 - prop_{asymp})}{days_{incub} - days_L} Q_{E,t} + a_B I_t$$

$$\left. - \left(\frac{prop_{hosp}}{days_{Q_I H}} + \frac{1 - prop_{hosp}}{days_{Q_I R}} \right) Q_{I,t} \right) dt$$

$$H_{t+1} = H_t + \left(\frac{prop_{hosp}}{days_{Q_I H}} Q_{I,t} - \left(\frac{prop_{recover}}{days_{HR}} + \frac{(1 - prop_{recover})}{days_{HD}} \right) H_t \right) dt$$

$$R_{t+1} = R_t + (\frac{prop_{asymp}}{days_{incub} - days_L} E_t$$

$$+ \frac{\left(1 - \left[a_B(1 - prop_{severe}) + (prop_{hosp})\right]\right)(1 - prop_{asymp})}{days_{incub} - days_L} Q_{E,t}$$

$$+ \frac{1 - prop_{hosp}}{days_{Q_I R}} Q_{I,t} + (a_{U,t} + (1 - a_{U,t}) a_{C,t} + \frac{1}{days_{IR}}) I_t + \frac{prop_{recover}}{days_{HR}} H_t) \, dt$$

$$D_{t+1} = D_t + \frac{(1 - prop_{recover})}{days_{HD}} H_t dt$$

Input data assumptions and sources for simulation model

We used natural disease progression estimates from other studies in the literature. The description of the data, sources, and values (with ranges and medians where applicable) for all parameters are available in the Supplemental Appendix. Briefly, we assumed an incubation period duration of 5.4 days [37], the first 2.5 days in stage L (not infectious and asymptomatic) [38], and the remaining in stage E (infectious and asymptomatic). We assumed about 65% of cases develop medium to severe symptoms [37] [39] [40] and, in the absence of test and trace or mass test, can be diagnosed through symptom-based testing. We assumed the remaining 35% of cases show mild to no symptoms and can be diagnosed only through trace and test, or universal

mass test. We assumed an average duration of 3.5 days from the time of onset of symptoms to hospitalization [41], with the proportion hospitalized varying as a function of age. For mild cases, we assumed an average duration of 7 days from the time of onset of symptoms to recovery [41]. We assumed case fatality rates vary as a function of age and gender.

Interventions

We evaluated mass testing at 5% and 10% of the population. We assumed a maximum contact tracing rate of 50%, modeling the rate as the inverse of the time to find, test, and isolate infected contacts from the time of their infection. To test the sensitivity of delays associated with trace and/or test, we evaluated trace and test rates of 10%, 17%, 20%, 25%, 33%, and 50%, equivalent of 10, 6, 5, 4, 3, and 2 days, respectively, from time of infection to effective isolation. We assumed trace and test would initiate within the first 5 cases of diagnosis. To test the sensitivity of delays in initiation of trace and test, we also evaluated scenarios by delaying the initiating of trace and test to after diagnoses of 20 cases. We evaluated transmission rates (p) of 14% (baseline), 8% (mid), 5.4% (lower-mid), and 2.5% (lowest). The baseline value of p corresponds to an average estimate under no physical distancing and no face masks [12] [42]. Transmission rate of 8% relative to baseline corresponds to expected relative risk under use of face masks in non-health care settings [12]. Transmission rates of 5.4% and 2.5% correspond to expected rates under 3ft and 6ft physical distancing, respectively [12]. We evaluated contact rates between 1 and 25 (c), we did not separate between on-campus and off-campus contact rates. In all scenarios, we applied baseline symptom-based testing and 14-day quarantine for diagnosed persons. For diagnosis in asymptomatic stages, we assumed a test sensitivity of 0.9 for trace and test and universal (mass) testing [43].

Application to a university setting

Demographic data: We used the Fall 2018 student enrollment data from the University of Massachusetts Amherst, Amherst, MA, to determine the population size of undergraduate and graduate students and their age and gender distributions [44]. For faculty and staff, we used the age distribution of persons 25 years and older from the Town of Amherst, MA, where the university is located [45]. To initiate an outbreak, we assumed 4 to 5 infected cases on day 1 based on the following. We assumed that the proportion of incoming students who are infected would be equal to the prevalence of Massachusetts. We also assumed that all incoming students would be tested, and about 10% of infected cases would be false negatives. Prevalence is unknown, as not all cases are diagnosed and diagnosed cases are not specifically tracked. Therefore, to estimate prevalence of COVID-19 in MA, we used the simulation model to determine the ratio of new diagnosis to persons with infection and applied that ratio to the number of new diagnoses on June 26th in MA. This resulted in about 5 infected cases on day 1 remaining undetected, thus initiating an outbreak. We also assumed that at the beginning of every week, there would be about 3 to 4 infections from outside, calculated by assuming that about 10% of the population are likely to mix with the population outside the university or travel out of Amherst during weekends and are not tested upon return. Based on the above, we initialized the model on Day 1 with 4 to 5 infected persons in the Latent stage and added 3 to 4 outside cases to the Latent state at the beginning of every week. We simulated the model for a 90-day period to represent the duration of the expected Fall semester.

Results

The contact rate thresholds, which represent the values that, if exceeded, lead to greater than 1 death, under varying combinations of transmission rate, trace and test, and universal test are presented in Figure 2. Figure 2 also shows interpolated values of contact rate thresholds (dotted line) for the full range of transmission rates.

When transmission rate was 14%, with only 10% mass test, the contact rate threshold was 1 (Figure 2A). With 50% trace and test, equivalent to finding and isolating contacts within 2 days of infection, the contact rate threshold was 4 (Figure 2A). With 10% (and 33%) trace and test, equivalent to 10 (and 3) days to find and isolate infected contacts from the time of their infection, the contact rate threshold was 1 (and 3) (Figure 2B). Delays in initiating trace and test to after diagnoses of 20 cases also reduced the contact rate threshold to 2 (Figures 2C). Delays in initiating trace and test to after diagnoses of 20 cases, and trace and test rates of 33% and lower (equivalent to more than 2 days to find and isolate infected contacts from the time of their infection) reduced the contact rate threshold to 1 (Figure 2D). With maximum testing of 10% mass test, 50% trace and test, and initiating trace and test within 5 cases of diagnoses, the threshold contact rate was 7 (Figure 2A).

When transmission rate was 8%, with only symptom-based test, only 10% mass test, or only 50% trace and test, the contact rate thresholds were 1, 3, and 8, respectively (Figure 2A). With both 10% mass test and 50% trace and test, the contact rate threshold was 12 (Figure 2A). With 10% (and 33%) trace and test, equivalent to 10 (and 3) days to find and isolate infected contacts from the time of their infection, the contact rate threshold was 2 (and 6) (Figure 2B). Delays in

initiating trace and test to after diagnoses of 20 cases, and trace and test rates of 33% and lower (equivalent to more than 2 days to find and isolate contacts from the time of their infection), reduced the contact rate threshold to between 2 and 3 (Figure 2D).

When transmission rate was 5.4%, with only symptom-based testing, only 10% mass test, or only 50% trace and test, the contact rate threshold were 2, 4, and 12, respectively (Figure 2A). With both 10% mass test and 50% trace and test, the contact rate threshold was 18 (Figure 2A). With 10% (and 33%) trace and test, equivalent to 10 (and 3) days to find and isolate infected contacts from the time of their infection, the contact rate threshold was 4 (and 9) (Figure 2B). Delays in initiating trace and test to after diagnoses of 20 cases, and trace and test rates of 33% and lower (equivalent to more than 2 days to find and isolate contacts from the time of their infection), reduced the contact rate thresholds to between 3 and 5 (Figure 2D).

When transmission rate was 2.5%, with only symptom-based test, or only 10% mass test, the threshold contact rates were 5, and 9, respectively (Figure 2A). With 50% trace and test the epidemic was under control up until a contact rate of 25. Delays in initiating trace and test to after diagnoses of 20 cases, and trace and test rates of 33% and lower (equivalent to more than 2 days to find and isolate contacts from the time of their infection), reduced the contact rate threshold to between 5 and 12 (Figure 2D).

The number of deaths under varying combinations of universal mass test, trace and test, transmission rate, and contact rate are presented in Figures S1 and S2 of the Appendix. All scenarios with less than 1 death are also presented in the Appendix Figures S1 and S2.

For all scenarios with 50% trace and test that resulted in less than 1 death, Figure 3 presents the total number of trace and tests over the duration of the semester, the peak number of trace and tests per day, and the peak number quarantined (excluding false positives), interpolated over the transmission rate range. Both metrics increased as contact rate increased, and decreased with the addition of universal testing, as expected. When contact rate was 5 and transmission rate was below 5.4%, total trace and tests varied from about 200 (trace and test + 10% mass test) to 300 (trace and test only), and the peak trace and tests per day varied from about 15 (50% trace and test + 10% mass test) to 30 (50% trace and test only). For combinations of contact rate above 5 and transmission rate above 5.4%, the peak number of trace and tests per day rise quickly, e.g., reaching 60 and 80 when contact rate was 6 and 7, respectively, and transmission rate was 8%.

Delay in initiating trace and test to after diagnosis of 20 cases, would increase the peak number of trace and tests or increase deaths (Figure 4). When contact rate was 5 and the transmission rate was below 5.4%, total trace and tests varied from about 180 (50% trace and test + 10% mass test) to 400 (50% trace and test), and the peak trace and tests per day varied from about 20 (50% trace and test + 10% mass test) to 85 (50% trace and test). For combinations of transmission rate above 5.4% and contact rate above 5, the number of trace and tests per day peak above 50 and rise rapidly, e.g., reaching 200 and 230 (50% trace and test) when contact rate was 6 and 7, respectively, and transmission rate was 8% (not shown in Figure). These two scenarios also generated 2 deaths. Adding 10% mass test reduces deaths to below 1, while also relaxing the peak trace and tests to 45 and 60 when contact rate was 6 and 7, respectively.

For scenarios with 50% trace and test, transmission rate below 5.4%, and contact rate at 5 or below, the peak quarantines per day (excluding false positives), went up to 25 if trace and test initiated within diagnosis of 5 cases (Figure 3), and up to 60 if delay in initiating trace and test to after diagnosis of 20 cases (Figure 4). As test specificity ranges from 96.5% and 99% [43], we can expect the number of quarantines peaking at a higher value because of false positives, especially with mass testing. Though we did not explicitly model false positives in the simulation, we can estimate a lower bound, as the product of the number of mass tests per day and false positivity rate, plus the additional false positives generated through tracing of the false positives using the contact rate in each scenario. And multiplying the result by 14 to estimate the expected number of quarantines per day. Among scenarios with 10% mass test (about 3800 tests per day), for a test specificity of 99%, the number of quarantines per day range from 530 to 700. Among scenarios with 5% mass test (about 2000 tests per day), for a test specificity of 99%, the number of quarantines ranged from 280 to 370 per day.

Figure 5 presents the proportion of testing scenarios (across varying levels of mass test, trace and test, and delays in trace and test initiation) that meet the contact rate thresholds. When transmission rate was 8%, about 60% of scenarios had contact rate threshold of 3 or higher, and when transmission rate was 5.4%, about 73% of scenarios had contact rate threshold of 4 or higher. Specifically, when transmission rate was 8%, a contact rate of 3 kept deaths below 1 if trace and test rates were 20% or above (equivalent to finding and isolating infected contacts within 5 days from the time of their infection), even with a delay in initiating trace and test to after diagnosis of 20 cases (Appendix Figures S3 and S4). When transmission rate was 5.4%, a contact rate of 4 kept deaths below 1 if trace and test rates were 17% or above (equivalent to

finding and isolating infected contacts within 6 days from the time of their infection), even with a delay in initiating trace and test to after diagnosis of 20 cases (Appendix Figures S3 and S4). In these scenarios, the number of trace and tests peaked to between 20 and 70 when contact rate was 3 and transmission rate was 8%, and to between 20 and 50 when contact rate was 4 and transmission rate was 5.4% (Appendix Figures S3 and S4).

The total number of hospitalizations, for the duration of the semester, in all scenarios that resulted in less than 1 death, peaked at 7.

Discussions

This work estimates, under varying combinations of mass test, trace and test, and transmission rate (physical distancing and face mask use), the contact rate thresholds, which if exceeded, lead to rapid growth of the epidemic causing multiple deaths. It also estimates, under varying combinations of mass test, trace and test, transmission rate, and contact rate, the number of trace and tests, quarantines, hospitalizations, and deaths.

It is difficult to determine how the threshold contact rate estimates compare to those expected at a university, as the data on contact rates prior to the COVID-19 outbreak are unavailable. One study, conducted prior to the COVID-19 outbreak, estimated an average rate of 21 among middle-aged adults in Portland, Oregon [46], however, contact rates in a university are likely to be different. After the COVID-19 outbreak, more studies to estimate contact rates are emerging, however, they are under the context of state-issued stay-at-home orders, and thus are representative of the lower bounds. In one such poll [47] of U.S. adults, those who self-asses

their status as ‘completely isolated’ (about 27%) reported a median (and mean) non-household contact rate of 0 (and 1.5), those who self-asses their status as ‘mostly isolated’ (about 47%), reported a median (and mean) non-household contact rate of 2 (and 5.4), and those who self-asses their status as ‘partially isolated’ (about 17%), reported a median and mean non-household contact rate of 2 (and 5.4). Among those listing their work sector as ‘education’ (which included library and training services), reported a median (and mean) work contact rate of 1 (and 2.6). Another study [48] reported a median (and mean) contact rate of 2 (and 2.7) among a nationally representative survey of the US population, with 85% of surveyors reporting four or fewer contacts. The above studies were under maximum lockdowns, and thus, how these would change upon reopening, and specifically at a university, are unknown, but can be expected to be higher thus requiring careful control.

Another challenge in relating these threshold contact rates to that expected at a university arises from the uncertainty in what defines a ‘contact’. In the above studies, the term contact rate has varied definitions, such as the number of people who are < 6ft away from a person, the number of people touched by another person, or the number of people with who a person has face to face conversations. For epidemic spread, a contact is defined as any contact that exposes one to the infection. Under the context of the SARS-CoV-2 virus, the above definitions are insufficient as aerosol and environmental (surfaces) modes of transmission do not require one to be in direct contact [49] [50] [51] [52]. On the other hand, use of face masks, physical distancing, and sanitizing and cleaning, due to mandated policies or increased awareness, could reduce the exposure from those in the vicinity [17] [19] [20] [21] [22]. Current definitions for contact combine the two.

Given the above challenges, in this study we attempted to separate out contact rates from transmission rates. Considering the uncertainty in the baseline transmission rate, and in the expected reductions from face mask use and physical distancing [12], uncertainties rising from inherent features, feasibility, and compliance, we interpolated results for the full range of transmission rate. The transmission rates simulated here cover the range of estimates from the literature for baseline 14% (11.6%-17%), and expected reductions from use of surgical or cloth face masks in non-health care settings 7.8% (5.6%-11.1%), 3ft physical distancing 6.9% (3.6%-13%), and 6ft physical distancing 2.8%(1.4%-5.7%), calculated using relative risks from a meta-analysis study that, in addition to SARS-CoV-2, evaluated viruses of similarly high virulence [12] (see Supplemental Appendix Table S2).

The contact rate thresholds in this study can help inform decisions related to planning of indoor spacing and personnel scheduling, by eliminating scenarios that generate contact rates that cross the threshold. However, the selection of contact rates should be considered in conjunction with testing rates and transmission rates. The contact rate thresholds were low when trace and test rates were low or transmission rates were higher than 5.4%. Though the contact rate thresholds under low transmission rates and 50% trace and test were higher, going above 5, the feasibility of finding, testing, and isolating infected contacts within 2 days of infection (50% trace and test) should be evaluated specific to the setting of implementation. When transmission rate was 5.4% or below and contact rate was higher than 5, any delays in trace and test generated rapid accumulation of the number of persons to trace and test with the peak numbers per day going above 50, and eventually leading to several deaths if testing delays continued. When transmission rate was 5.4%, a contact rate threshold of 4 was more robust to testing delays, and

when transmission rate was 8%, a contact rate threshold of 3 was more robust to these testing delays.

In addition to contact rate thresholds, the resource availabilities for testing and quarantining, should be considered in selection of a strategy. Addition of mass test to trace and test generally had a significant reduction in the peak number of trace and tests. In comparing between choice of mass tests or trace and tests, the trade-offs are between high false positives requiring more resources for quarantining in mass test versus low quarantine resource needs but high tracing resource needs for trace and test. Availability of resources for trace and test versus quarantine should be evaluated specific to the setting.

Our work is subject to limitations. Our model is deterministic. We did not specifically model false positives hence, the estimates here only provide a lower bound. We used an average contact rate for all persons, in order to help decisions related to designing a controlled environment, such as controlling workplace scheduling and layouts and issuing uniform guidelines. We did not model contact rates to be representative of actual expected behaviors of individuals or to be representative of actual expected networks between individuals. We did not explicitly model other interventions that could reduce transmission rate such as controlled ventilation, filtering air and controlling air flow, which are likely to impact transmissions [53]. The transmission rates evaluated should be used with caution. The baseline estimate of 14% is an average estimate, and the estimates for face masks and physical distancing are relative to these estimates. For a different baseline transmission rate, the interpolated values of transmission rates should be used to determine expected reduction. We did not model other flu like illnesses and thus we did not

assess the additional healthcare resource needs such as testing and quarantining because of similarity in symptoms with COVID-19.

Despite these limitations, the results from this work could collectively help inform development of a preparedness plan for reopening of a University. Contact rates can help plan indoor spacing and personnel scheduling of classrooms, labs and office spaces, housing, and dining. The estimates for the number of tests and quarantines, presented here under each scenario, can help determine the resource needs such as personnel, equipment, and infrastructure. Though off-campus contact rates cannot be controlled, estimates of threshold contact rates can help eliminate indoor spacing and personnel scheduling scenarios that exceed these contact rate thresholds that have a high chance of an epidemic. The threshold contact rates can only help in elimination of strategies and should not be used as a metric for selection of a strategy. The uncertainty ranges in results suggest that selection of a strategy should collectively consider indoor spacing, personnel scheduling, testing, and quarantining. Selection of a scenario should be done after a feasibility assessment that compares resource needs under each scenario to excepted resource availability for testing and quarantining, and risk assessment to determine the ability to control transmission rate through use of face masks and physical distancing, including its feasibility and compliance.

Acknowledgements

We would like to acknowledge Sonza Singh, Shifali Bansal, Seyedeh Nazanin Khatami, and Arman Mohseni Kabir for their assistance in data collection in initial stages of the study, and Dr. Laura Balzer, Dr. Michael Ash, and Dr. Hari Balasubramanian for their comments and inputs.

Figures and tables

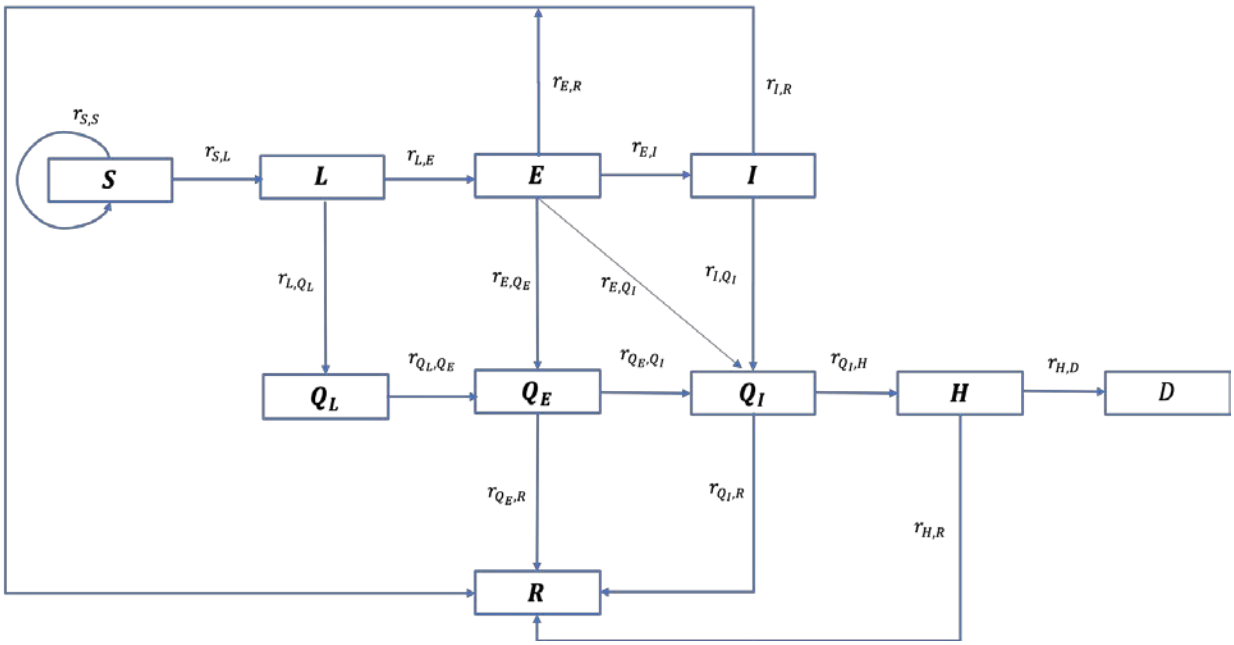

Figure 1: Extended SEIR compartmental model; S = Susceptible, L = exposed and not infectious (Latent stage) (asymptomatic), E = Exposed and infectious (asymptomatic), I = Infectious (symptomatic and infectious), Q_L = exposed and not infectious (Latent) and Quarantined (diagnosed), Q_E = Exposed and infectious and Quarantined (diagnosed), Q_I = Infectious and Quarantined (diagnosed), H = Hospitalized, R = Recovered, and D = Deaths.

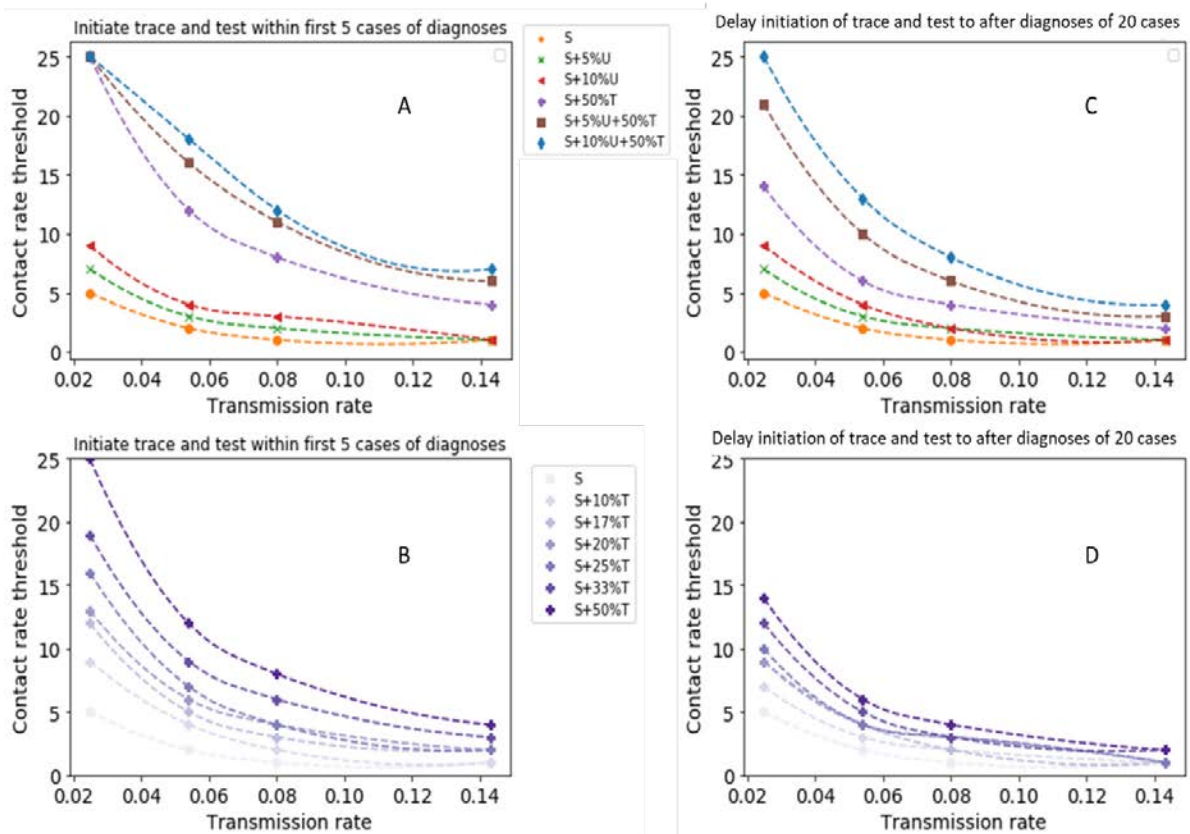

Figure 2: Threshold contact rates under varying combinations of transmission rate, mass test (U), and trace and test (T), that generated less than 1 deaths; S: symptom-based testing; 5%U, and 10%U: mass test rate per day, equivalent to test once every 20 days, and 10 days, respectively; 10%T, 17%T, 20%T, 25%T, 33%T, 50%T: %trace and test rate, representing 10 days, 6 days, 5 days, 4 days, 3 days, and 2 days, respectively, from the time of infection to diagnosis and isolation; Transmission rates from the literature (see Supplement Appendix Table S2) for baseline: 15% (11.6%-17%), surgical or cloth face masks use in non-health care setting 7.8% (5.6%-11.1%), 3ft physical distancing 5.4% (3.6%-13%), and 6ft physical distancing 2.8%(1.4%-5.7%). Solid markers are simulated cases. Dotted lines are interpolations.

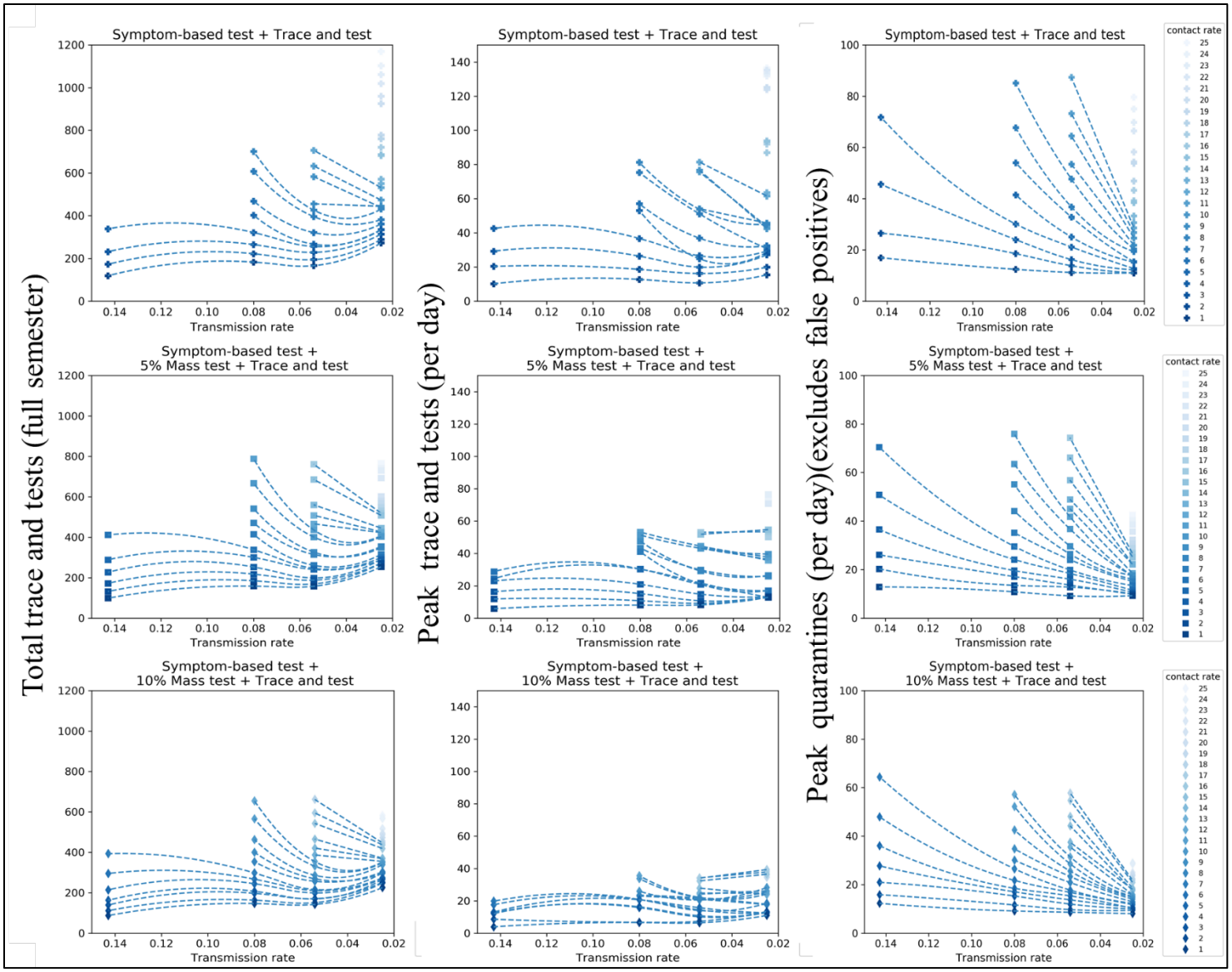

Figure 3: Resource needs under varying combinations of mass test, trace and test (50%), contact rate, and transmission rate that generated less than 1 deaths, when trace and test was initiated within 5 cases of diagnoses. Solid markers are simulated. Dotted lines are interpolations.

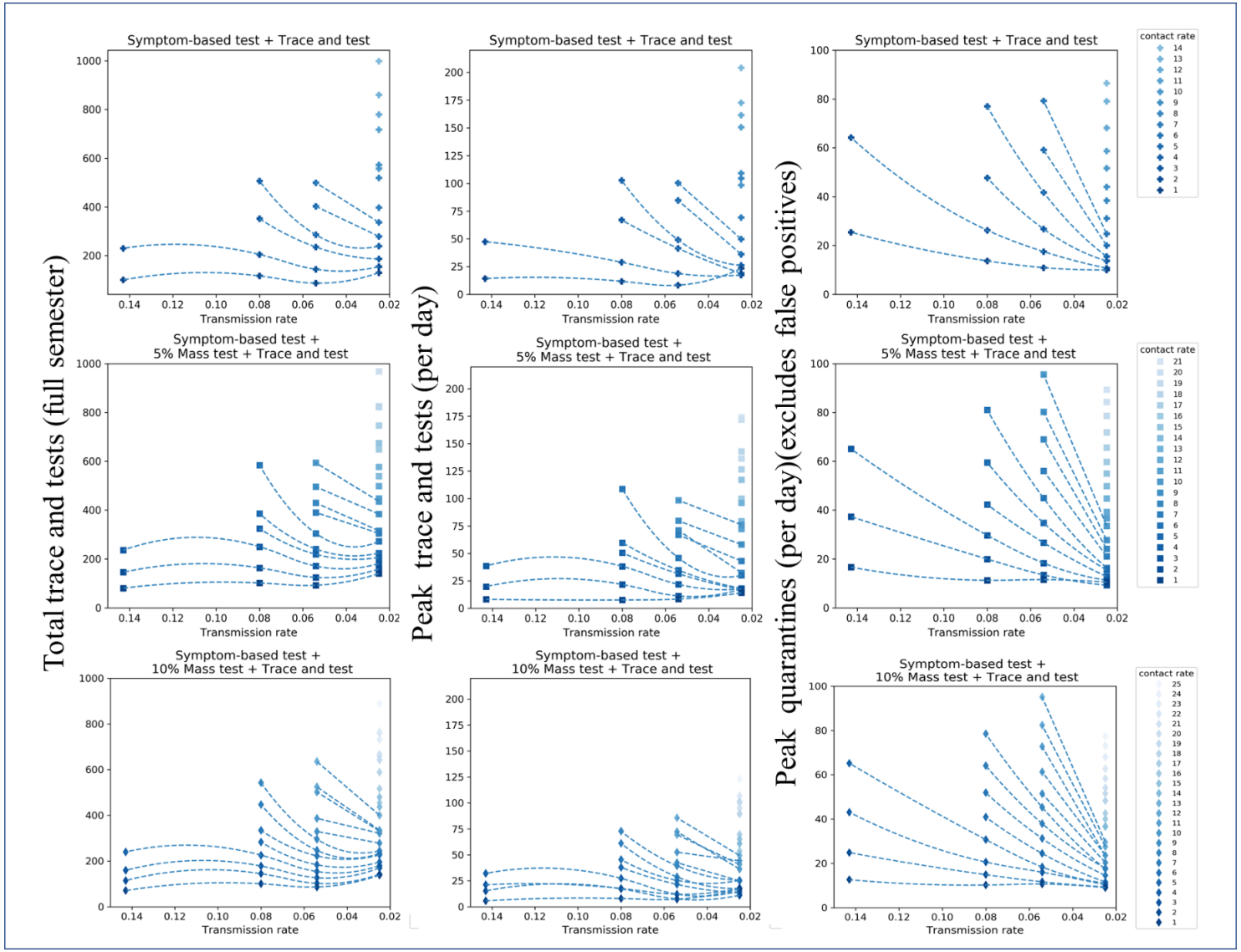

Figure 4: Resource needs under varying combinations of mass test, trace and test (50%), contact rate, and transmission rate that generated less than 1 deaths, when trace and test was initiated after diagnoses of 20 cases. Solid markers are simulated cases. Dotted lines are interpolations.

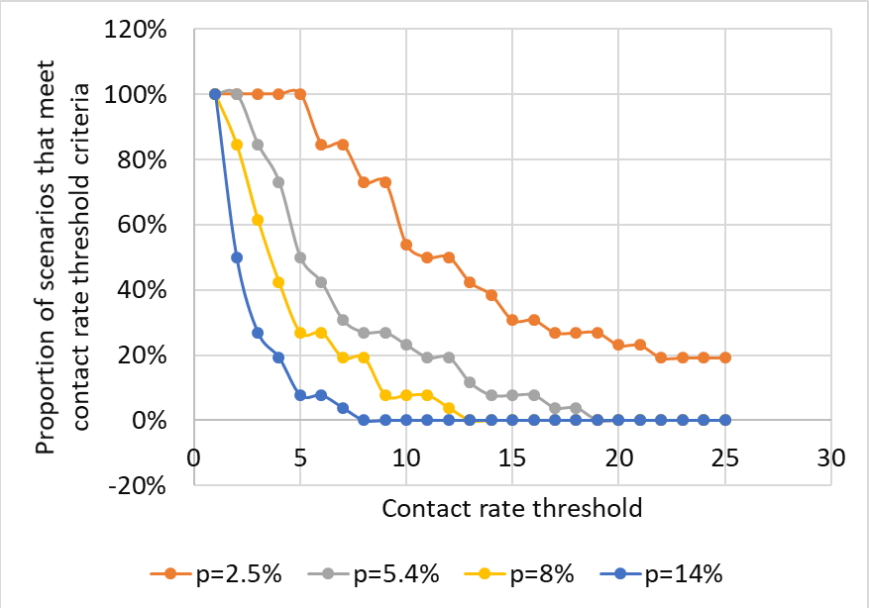

Figure 5: Among all the testing scenarios evaluated (varying levels of mass test, trace and test, and delays in trace and test initiation), the proportion of scenarios (y-axis) with contact rate threshold higher than the value on the x-axis. (e.g., for transmission rate (p) = 8%, about 60% of scenarios had contact rate threshold of 3 or higher, and for p=5.4%, about 73% of scenarios had contact rate threshold of 4 or higher).

References

[1] "Timeline of COVID-19 policies, cases, and deaths in your state," Johns Hopkins University of Medicine, Coronavirus Resource Center, 8 July 2020. [Online]. Available: https://coronavirus.jhu.edu/data/state-timeline. [Accessed 8 July 2020].

[2] J. H. Holzer, "The COVID-19 crisis: How do U.S. employment and health outcomes compare to other OECD countries?," Brookings, 2 June 2020. [Online]. Available: https://www.brookings.edu/research/the-covid-19-crisis-how-do-u-s-economic-and-health-outcomes-compare-to-other-oecd-countries/. [Accessed 8 July 2020].

[3] L. D. Blustein, R. Duffy, et al, "Unemployment in the time of COVID-19: A research agenda," J Vocat Behav, vol. 119, no. 103436, 2020.

[4] CDC, "How to Protect Yourself & Others," 24 April 2020. [Online]. Available: https://www.cdc.gov/coronavirus/2019-ncov/prevent-getting-sick/prevention.html. [Accessed 08 July 2020].

[5] "Interim Guidance for Businesses and Employers Responding to Coronavirus Disease 2019 (COVID-19), May 2020," CDC, 6 May 2020. [Online]. Available: https://www.cdc.gov/coronavirus/2019-ncov/community/guidance-business-response.html. [Accessed 8 July 2020].

[6] "Interim Guidance for Administrators of US Institutions of Higher Education," CDC, 18 March 2020. [Online]. Available: https://www.cdc.gov/coronavirus/2019-ncov/community/guidance-ihe-response.html. [Accessed 08 July 2020].

[7] "Epidemic theory (effective & basic reproduction numbers, epidemic thresholds) & techniques for analysis of infectious disease data (construction & use of epidemic curves, generation numbers, exceptional reporting & identification of significant clusters)," Health Knowledge, [Online]. Available: https://www.healthknowledge.org.uk/public-health-textbook/research-methods/1a-epidemiology/epidemic-theory. [Accessed 8 July 2020].

[8] J. A. Kucharski, P. Klepac, et al., "Effectiveness of isolation, testing, contact tracing, and physical distancing on reducing transmission of SARS-CoV-2 in different settings: a mathematical modelling study," Lancet Infect Dis, vol. 3099, no. 20, 2020.

[9] X. He, E. H. Y. Lau, et al., "Temporal dynamics in viral shedding and transmissibility of COVID-19," Nat Med., vol. 26, no. 5, p. 672–5, 2020.

[10] J. Bedford, D. Enria, et al., "COVID-19: towards controlling of a pandemic," Lancet, vol. 395, no. 10229, pp. 1015-8, 2020.

[11] C. R. MacIntyrea and A. A. Chughtaib, "A rapid systematic review of the efficacy of face masks and respirators against coronaviruses and other respiratory transmissible viruses for the

community, healthcare workers and sick patients," Int J Nurs Stud., vol. 108, no. 103629, 2020.

[12] K. D. Chu, E. A. Akl, et al., "Physical distancing, face masks, and eye protection to prevent person-to-person transmission of SARS-CoV-2 and COVID-19: a systematic review and meta-analysis," *The Lancet*, vol. 395, no. 10242, pp. 1973-87, 2020.

[13] R. Roos, "Masks plus hand hygiene reduced ILI in college dorm study," CIDRAP, 22 Jan 2010. [Online]. Available: https://www.cidrap.umn.edu/news-perspective/2010/01/masks-plus-hand-hygiene-reduced-ili-college-dorm-study. [Accessed 08 July 2020].

[14] E. A. Aiello, G. F. Murray, et al., "Mask use, hand hygiene, and seasonal influenza-like illness among young adults: A randomized intervention trial," *Journal of Infect Dis*, vol. 201, no. 4, pp. 491-8, 2010.

[15] M. Meselson, "Droplets and Aerosols in the Transmission of SARS-CoV-2," N Engl J Med, vol. 382, no. 21, 2020.

[16] H. K. Courage, "How superspreading is fueling the pandemic — and how we can stop it," Vox, 02 July 2020. [Online]. Available: https://www.vox.com/21296067/coronavirus-covid-symptoms-superspreaders-superspreading-contagious-bars-restaurants. [Accessed 08 July 2020].

[17] L. Setti, F. Passarini, et al., "Airborne Transmission Route of COVID-19: Why 2 Meters/6 Feet of Inter-Personal Distance Could Not Be Enough," *Int. J. Environ. Res. Public Health*, vol. 17, no. 8, p. 2932, 2020.

[18] A. Mandavilli, "239 Experts With One Big Claim: The Coronavirus Is Airborne," The New York Times, 7 July 2020. [Online]. Available: https://www.nytimes.com/2020/07/04/health/239-experts-with-one-big-claim-the-coronavirus-is-airborne.html. [Accessed 8 July 2020].

[19] M. Jayaweera, H. Perera, et al., "Transmission of COVID-19 virus by droplets and aerosols: A critical review on the unresolved dichotomy," *Environ Res*, vol. 188, no. 109819, 2020.

[20] L. Anderson, P. Turnham, et al., "Consideration of the Aerosol Transmission for COVID-19 and Public Health," *Risk Analysis*, vol. 40, no. 5, pp. 902-7, 2020.

[21] A. K. Prather, C. C. Wang and T. R. Schooley, "Reducing transmission of SARS-CoV-2," Science, vol. 368, no. 6498, pp. 1422-4, 2020.

[22] R. Zhang, X. Li, et al., "Identifying airborne transmission as the dominant route for the spread of COVID-19," *Proc Natl Acad Sci U S A* , vol. 117, no. 26, pp. 14857-63, 2020.

[23] White House, CDC, "Guidelines - Opening up American Again," [Online]. Available: https://www.whitehouse.gov/openingamerica/. [Accessed 13 June 2020].

[24] "White House Releases 'Opening Up America Again' Guidelines," Northstar Meeting group, [Online]. Available: https://www.northstarmeetingsgroup.com/News/Industry/White-House-Opening-Up-America-Again-Guidelines. [Accessed 13 June 2020].

[25] T. Brown, J. H. Y. Tai, et al., "Would school closure for the 2009 H1N1 influenza epidemic have been worth the cost?: a computational simulation of Pennsylvania," *BMC Public Health,* vol. 11, no. 353, 2011.

[26] S. Cauchemez, N. M. Ferguson, et al., "Closure of schools during an influenza pandemic," *Lancet Infect Dis.*, vol. 9, no. 8, pp. 473-81, 2009.

[27] O. M. Araz, P. Damien, et al., "Simulating school closure policies for cost effective pandemic decision making," *BMC Public Health,* vol. 12, no. 449, 2012.

[28] J. Bernstein, B. Hutler, et al., "An Ethics Framework for the COVID-19 Reopening Process," 2020. [Online]. Available: https://jscholarship.library.jhu.edu/handle/1774.2/62383. [Accessed 2020 13 June].

[29] M. R. Viner, S. J. Russell, et al., "School closure and management practices during coronavirus outbreaks including COVID-19: a rapid systematic review," *Lancet Child Adolesc Health,* vol. 4, no. 5, pp. 397-404, 2020.

[30] A. Aleta, D. Martin-Corral, et. al., "Modeling the impact of social distancing, testing, contact tracing and household quarantine on second-wave scenarios of the COVID-19 epidemic," *medRxiv,* 2020.

[31] L. D. Domenico, G. Pullano, et al., "Expected impact of reopening schools after lockdown on COVID-19 epidemic in Île-de-France," medRxiv, 2020.

[32] J. Hellewell, S. Abbott, et al., "Feasibility of controlling COVID-19 outbreaks by isolation of cases and contacts," *Lancet Glob Health,* vol. 8, no. 4, p. e488–96., 2020.

[33] T. P. Gressman and R. J. Peck, "Simulating COVID-19 in a University Environment," 30 June 2020. [Online]. Available: https://arxiv.org/pdf/2006.03175.pdf. [Accessed 8 July 2020].

[34] A. D. Paltiel, A. Zheng and P. R. Walensky, "COVID-19 screening strategies that permit the safe re-opening of college campuses," *medRxiv,* 2020.

[35] "COVID-19 on Campus: How Should Schools Be Redesigned?," Knowledge @ Wharton, University of Pennsylvania, Wharton, 22 June 2020. [Online]. Available: https://knowledge.wharton.upenn.edu/article/how-should-universities-be-redesigned-in-the-wake-of-covid-19/. [Accessed 8 July 2020].

[36] M. Vasquez and F. Diep, "What Covid-19 Computer Models Are Telling Colleges About the Fall," The Chronicle of Higher Education, 19 June 2020. [Online]. Available: https://www.chronicle.com/article/What-Covid-19-Computer-Models/249027. [Accessed 8 July 2020].

[37] A. Hill, M. Levy, et al., "Modeling COVID-19 Spread vs Healthcare Capacity," [Online]. Available: https://alhill.shinyapps.io/COVID19seir/. [Accessed 27 May 2020].

[38] S. Ma, J. Zhang, et al., "Epidemiological parameters of coronavirus disease 2019: a pooled analysis of publicly reported individual data of 1155 cases from seven countries," medRxiv, 2020.

[39] Z. Wu and J. McGoogan, "Characteristics of and Important Lessons From the Coronavirus Disease 2019 (COVID-19) Outbreak in China Summary of a Report of 72 314 Cases From the Chinese Center for Disease Control and Prevention," JAMA, vol. 323, no. 13, pp. 1239-1242, 2020.

[40] R. Li, S. Pei, et al., "Substantial undocumented infection facilitates the rapid dissemination of novel coronavirus (COVID-19)," medRxiv, 2020.

[41] MIDAS 2019 Novel Coronavirus Repository, [Online]. Available: https://github.com/midas-network/COVID-19. [Accessed 24 04 2020].

[42] J. P. Zhao, "A Social Network Model of the COVID-19 Pandemic," medRxiv, 27 March 2020.

[43] A. Kobokovich, R. West and G. Gronvall, "Serology-based tests for COVID-19," Johns Hopkins Bloomberg School of Public Health, Center for Healthy Security, 7 July 2020. [Online]. Available: https://www.centerforhealthsecurity.org/resources/COVID-19/serology/Serology-based-tests-for-COVID-19.html. [Accessed 8 July 2020].

[44] "At a glance, 2019-2020," University of Massachusetts, Amherst, [Online]. Available: https://www.umass.edu/oir/sites/default/files/publications/glance/FS_gla_01.pdf. [Accessed 9 June 2020].

[45] "Profile of General Population and Housing Characteristics: 2010 more information 2010 Census Summary File 1,
" The United States Census Bureau, [Online]. Available: https://archive.vn/20200213235006/https://factfinder.census.gov/bkmk/table/1.0/en/DEC/10_SF1/SF1DP1
/0600000US2501501325#selection-263.0-273.26. [Accessed 9 June 2020].

[46] S. Y. D. Valle, J. M. Hyman, et al., "Mixing patterns between age groups in social networks," *Social Networks*, vol. 29, no. 4, pp. 539-54, 2007.

[47] J. Rothwell, "Americans' Social Contacts During the COVID-19 Pandemic," GALLUP, 21 April 2020. [Online]. Available: https://news.gallup.com/opinion/gallup/308444/americans-social-contacts-during-covid-pandemic.aspx. [Accessed 14 June 2020].

[48] M. D. Feehan and A. Mahmud, "Quantifying interpersonal contact in the United States during the spread of COVID-19: first results from the Berkeley Interpersonal Contact Study," medRxiv.

[49] National Research Council, "Rapid expert consultation on the possibility of Bioaerosol spread of SARS CoV-2 for the COVID-19 Pandemic," The National Academic Press, 2020.

[50] Z. D. Guo, Z. Y. Wang, et al., "Aerosol and Surface Distribution of Severe Acute Respiratory Syndrome Coronavirus 2 in Hospital Wards, Wuhan, China, 2020," *EID Journal*, vol. 26, no. 7, pp. 1583-91, 2020.

[51] Y. Liu, Z. Ning, et al., "Aerodynamic analysis of SARS-CoV-2 in two Wuhan hospitals," *Nature*, vol. 582, no. 7813, pp. 557-60, 2020.

[52] V. N. Doremalen, "Aerosol and Surface Stability of SARS-CoV-2 as Compared with SARS-CoV-1," *N Engl J Med*, vol. 382, pp. 1564-7, 2020.

[53] H. Dai and B. Zhao, "Association of infectied probability of COVID-19 with ventilation rates in confined spaces: a Wells-Riley equation based investigation," *medRxiv*, 2020.