A Model for the Testing and Tracing Needed to Suppress COVID-19

Victor Wang, Ph.D.

Abstract

This paper presents a simple mathematical model that answers how much testing and tracing we need to do to suppress new surges of COVID-19 infections after reopening. We derived the model by modifying the SEIR model taking into the effects of testing and tracing. The following equation is one of the essential outcomes of the model:

$$\rho > \frac{R_0 \frac{S}{N} - 1}{D(1 + \eta R_0)}$$

Where ρ is the percentage of infectious people that have to be detected per day, R_0 is the basic reproduction number, S/N is the percentage of the susceptible population over the entire population, D is the length of the infectious period, and η is the percentage of close contacts that have to be traced. If the above equation is satisfied, we can bring the effective reproduction number R_e to below 1 to get the transmission suppressed. This model demonstrates that together with social-distancing measures such as wearing masks in public, with a reasonable amount of testing and tracing, we may suppress the COVID-19 transmission for good. For example, if social distancing measures can bring R_0 to below 1.2, for D being 10 days, in places where 15% people have developed antibodies, we can suppress the transmission by detecting only 0.13% of the infectious population daily while tracing 50% of their close contacts. The model provides intuitive insights and quantitative guidance for policymakers and public health practitioners to deploy the testing and tracing resources optimally.

1. Introduction

As countries reopen their societies and economies from the COVID-19 lockdowns, the biggest concern is whether we will have new waves of infections. Before we have effective drugs and vaccines, the only measures we can rely on to suppress the transmission are social distancing such as wearing masks, testing to detect the infectious people to isolate them, and tracing their close contacts to quarantine them. This paper presents a simple mathematical model for the amount of testing and tracing needed to suppress the transmission, under the condition that certain social-distancing measures are in place, such as wearing masks in public.

The critical parameter of any infectious disease is its basic reproduction number R_0, the average number of people can be infected by an infectious person during his entire infectious period, without any intervention or mitigation measures. With various intervention and mitigation measures in place, the reproduction number changes, the literature often denote R_t as the reproduction number at a given time t. The literature further defines R_e as the effective

reproduction number taking into consideration of the effects of all the measures that can be taken, including social distancing, testing, and tracing with isolation. The goal of suppressing the transmission is to make $R_e < 1$.

One of the most widely used math models for infectious diseases is the SEIR model[1][2]. As depicted in Figure 1, the total population in consideration is divided into four distinctive compartments, denoted as *S*-susceptible, *E*-exposed (those contracted the disease but not yet infectious), *I*-infectious, and *R*-removed.

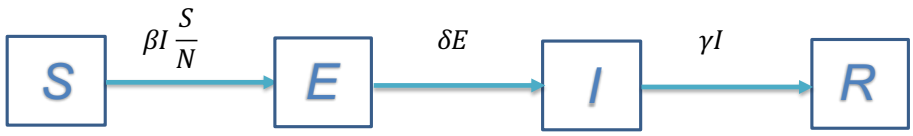

Figure 1. The SEIR compartment model for infectious diseases

In Figure 1:
S – the size of the population of susceptible.
E – the size of the population exposed to the disease and infected but not infectious yet.
I – the size of the population of infectious.
R – the size of the population of removed from both susceptible *S* and infected population $E+I$, including the recovered.
All of the above four variables change over time as an infectious disease progresses.
N – the size of the entire population in consideration $N = S + E + I + R$, which is a constant if without considering natural births and deaths, and the deaths due to the disease are negligible compared with *N*.
β-- the average daily number[1] of people to be infected by an infectious person, when $S=N$.
δ-- the latent rate, $\delta = \frac{1}{L}$, where *L* is the average length of time from being exposed to being infectious[2].
γ-- the remove rate, $\gamma = \frac{1}{D}$, where *D* is the average length of the infectious period.

This model makes the following assumptions:

(i) It ignores the effects of both natural births and deaths and the deaths due to the disease in consideration.
(ii) It defines "exposed" as those who already contracted the disease but not infectious yet, i.e., they are in the latent period.

[1] Note here we use "daily number" to make it easy to understand. In rigorous math terms, the "daily number" should be the number occurring in unit time. We use "daily number" throughout the text without further noting.
[2] Here we assume the exposure time is the same as the infection time although in general, that may not always be true. Note also that the latent period is not the same as the incubation period unless the patients become infectious exactly when they start to have symptoms[3][4]. But in any case, these differences do not affect our final result since it does not depend on this parameter δ.

(iii) The “removed” are not infectious nor to be subject to another infection. The "removed" are those who no longer infectious, whether recovered clinically or not.

Since β is the daily number of people infected by an infectious person, the transfer rate from *S* to *E* is $\beta I \frac{S}{N}$. Note, even though each infectious person can infect β persons daily if *S*=*N*, as the population of *S* shrinks, they have fewer to infect, thus the daily number of new infected is scaled by the factor of $\frac{S}{N}$. The transfer rate from *E* to I is reversely proportional to the length of the latent period. Similarly, the transfer rate from I to *R* is reversely proportional to the length of the infectious period.

With the above transfer rates between the compartments, we can have the following set of differential equations:

$$\frac{dS}{dt} = -\beta I \frac{S}{N}$$

$$\frac{dE}{dt} = \beta I \frac{S}{N} - \delta E$$

$$\frac{dI}{dt} = \delta E - \gamma I$$

$$\frac{dR}{dt} = \gamma I$$

$$\frac{dS}{dt} + \frac{dE}{dt} + \frac{dI}{dt} + \frac{dR}{dt} = 0$$

Given the above set of equations, with a set of initial conditions, we can have the populations' size at any given time *t*. However, what we are most interested in here is whether the infected population will increase or decrease. The rate of change of the infected population is:

$$\frac{d(E+I)}{dt} = \beta I \frac{S}{N} - \gamma I$$

To suppress the transmission, we need the population of $E + I$ to decrease over time, that is,

$$\frac{d(E+I)}{dt} < 0$$

That is,

$$\beta I \frac{S}{N} - \gamma I < 0$$

$$\frac{\beta}{\gamma}\frac{S}{N} < 1$$

Since $\gamma = \frac{1}{D}$, $\frac{\beta}{\gamma} = \beta D = R_0$, we have

$$R_0 \frac{S}{N} < 1 \qquad (Eq. 1)$$

As an infectious disease progresses, S keeps decreasing, when $\frac{S}{N} < \frac{1}{R_0}$, $Eq.$ 1 is satisfied; thus, the disease will die out. The literature refers to such a scenario as the population reaches the "herd immunity".

2. The SEIR model with Testing and Tracing

Without intervention measures, the infected population can only decrease as people naturally recover. The effects of testing and tracing are to artificially decrease the population of the infected by detecting and tracing then isolating them so that they can no longer infect other people. The SEIR model depicted in Figure 1 can be modified considering the effects of testing and tracing, as shown in Figure 2

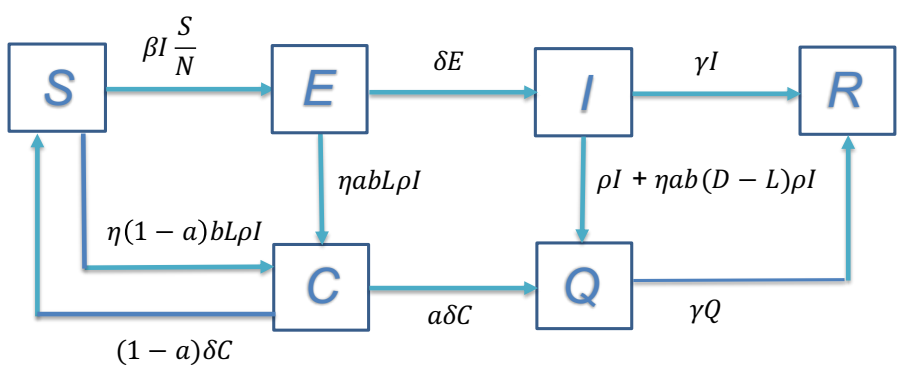

Figure 2. SEIR model with Testing and Tracing

Note here we add two more compartments:
C – the number of the close contacts traced and quarantined.
Q – the number of infectious people who are detected or traced and isolated.

We have:

$$S + E + I + R + C + Q = N$$

We further define $\beta = ab$, where:

a – the probability of a close contact to be infected by an infectious person.
b – the average number of close contacts an infectious person makes per day.

For measuring quantities of testing and tracing, we need to add two more variables as below:
ρ -- the percentage of infectious people that are detected per day.
η -- the percentage of close contacts that are traced per day.

By definition, the number of infectious people detected per day is ρI, hence the transfer rate from I to Q due to the detection is:

$$\rho I$$

The number of close contacts made by each infectious person per day is b, then the number of close contacts made per day by the infectious people detected is $b\rho I$; thus the total number of close contacts made by these infectious people during their entire infectious period D days is $bD\rho I$. Therefore, the total number of close contacts that are traced per day is:

$$\eta bD\rho I$$

The close contacts can be in any of the three boxes S, E, and I, depending on when they had close contact with an infectious person. Those who had close contact with an infectious person within the L days are not yet infectious thus in either box S or E, while those who had close contact more than L days ago become infectious thus are in box I [3]. Now we have the following transfer rates due to the tracing:

From box E to C:

$$\eta abL\rho I = \eta\beta L\rho I$$

From box S to C:

$$\eta(1-a)bL\rho I$$

From box I to Q (in addition to the transfer rate due to the detection) is[4]:

$$\eta ab(D-L)\rho I = \eta\beta(D-L)\rho I$$

We assume the infectious people in box Q are removed at the same rate as those in box I, then the transfer rate from box Q to R *is:*

$$\gamma Q$$

In box C, where there are both infected and non-infected. Those who are infected start to become infectious after their latent period, thus the transfer rate from box C to Q is:

[3] Here we assume the length of the infectious period D is equal or longer than the length of the latent period L, which is the case for COVID-19.
[4] We assume testing every close contact as soon as they are traced so we know who is infectious to be isolated.

$$a\delta C$$

While the transfer rate from box *C* back to *S* is

$$(1\text{-}a)\delta C$$

With the above transfer rates among the compartments established, we can have the following set of differential equations:

$$\frac{dS}{dt} = (1-a)\delta C - \beta I\frac{S}{N} - \eta(1-a)bL\rho I$$

$$\frac{dE}{dt} = \beta I\frac{S}{N} - \delta E - \eta\beta L\rho I$$

$$\frac{dI}{dt} = \delta E - \gamma I - \rho I - \eta\beta(D-L)\rho I$$

$$\frac{dR}{dt} = \gamma I + \gamma Q$$

$$\frac{dC}{dt} = \eta L(1-a)b\rho I + \eta abL\rho I - a\delta C - (1-a)\delta C = \eta bL\rho I - \delta C$$

$$\frac{dQ}{dt} = a\delta C + \rho I + \eta\beta(D-L)\rho I - \gamma Q$$

$$\frac{dS}{dt} + \frac{dE}{dt} + \frac{dI}{dt} + \frac{dR}{dt} + \frac{dC}{dt} + \frac{dQ}{dt} = 0$$

Given the above set of equations, with a set of initial conditions, we can have the populations' sizes at any given time *t*, at least numerically. Again, here we are only interested in the changes in the infected population. Note *E+I* is the total population of infected,

$$\frac{d(E+I)}{dt} = \beta I\frac{S}{N} - \eta\beta D\rho I - \gamma I - \rho I = \beta I\frac{S}{N} - (\eta\beta D\rho + \gamma + \rho)I$$

To suppress the transmission, we need the population of $E + I$ to decrease, that is,

$$\frac{d(E+I)}{dt} < 0$$

That is,

$$\beta I\frac{S}{N} - (\eta\beta D\rho + \gamma + \rho)I < 0$$

$$\beta \frac{S}{N} < (\eta\beta D\rho + \gamma + \rho)$$

$$\rho(1 + \eta\beta D) > \beta \frac{S}{N} - \gamma$$

$$\rho > \frac{\beta \frac{S}{N} - \gamma}{1 + \eta\beta D} \qquad (Eq. 2)$$

Since $\frac{\beta}{\gamma} = R_0$, dividing both nominator and denominator of $Eq. 2$ with γ, we have:

$$\rho > \frac{R_0 \frac{S}{N} - 1}{D(1 + \eta R_0)} \qquad (Eq. 3)$$

An equivalent form of *Eq. 3* is:

$$\frac{R_0(\frac{S}{N} - \eta\rho D)}{1 + \rho D} < 1 \qquad (Eq. 4)$$

The left side of the *Eq. 4* is the effective reproduction number R_e, taking into the consideration of the effects of both testing and tracing. That is, if *Eq. 3* holds, we have:

$$R_e = \frac{R_0(\frac{S}{N} - \eta\rho D)}{1 + \rho D} < 1 \qquad (Eq. 5)$$

3. How much testing and tracing needed

$Eq. 4$ defines the relationship between the daily testing ratio ρ and the daily tracing ratio η for various reproduction numbers R_0. For COVID-19, authors in [5] quoted 12 studies of the basic reproduction number, mostly from China before any intervention measures were taken, and come up with the average R_0 = 3.28 and median R_0 = 2.79. Another study involving a large number of cases in Wuhan, China, shows that average R_0 = 3.25 from January 1 to January 23, 2020, before Wuhan was locked down [6].

When R_0 is as high as 3.28, testing and tracing alone will not be able to suppress the transmission, we have to resort to additional measures such as social distancing. Among various social distancing measures, wearing masks in public has been proven effective. Research done at Hong Kong University shows that surgical masks can effectively reduce the transmission of the various viruses [7]. The research provided data for the reduction of virus transmission in six different scenarios: transmitting droplets larger than 5 μm and aerosols

smaller than 5 μm for coronavirus, influenza virus, and rhinovirus, respectively. Averaging over the six scenarios, wearing masks can reduce the transmission rate by 63%.

If we consider only wearing masks in social distancing and ignore the effects of other measures such as washing hands frequently and keeping physical distances, the reproduction number with social distancing, denoted as R_s, can be 3.28 x 37% = 1.23. Note R_s is determined only by the effects of social-distance measures in place. In the following discussion, we assume the social-distance measures remain the same over time so that R_s does not change with time.

Note that R_0 = 3.28 is among the highest values observed so far, mostly derived from the studies in large metropolitan areas like Wuhan in China, where population density is among the highest in the world. In the US, however, much lower R_0 has been observed as indicated in the websites https://rt.live/ and https://covid19-projections.com/infections-tracker/. The websites quoted that the average R_0 in the US is 2.22 before any intervention measure was taken. In all the states, only New York had R_0=3.66, while all other states had R_0 lower than 2.5.

When we calculate the amount of testing and tracing needed, we need to consider the effects of social-distancing measures already in place. Thus, we need to use the reproduction number with social distancing R_s rather than the basic reproduction number R_0. In the following discussion, we replace R_0 with R_s in *Eq. 3* to have:

$$\rho > \frac{R_s \frac{S}{N} - 1}{D(1 + \eta R_s)} \qquad (Eq. 6)$$

Since S changes over time, so too $R_s \frac{S}{N}$ which is the reproduction number at time t, as defined in[8]:

$$R_t = R_s \frac{S}{N} \qquad (Eq. 7)$$

Similarly, *Eq. 6* can be represented as:

$$R_e = \frac{R_s(\frac{S}{N} - \eta\rho D)}{1 + \rho D} < 1 \qquad (Eq. 8)$$

Now R_e is the effective reproduction number taking into consideration of the effects not only testing and tracing but also that of social distancing. It is clear here that R_e changes with time since R_t (or equivalently $\frac{S}{N}$) changes with time.

Our model depends on the value of D which is the average length of the infectious period. To suppress the transmission, it is critical to understand when infected people start to shed virus, the intensity of the virus shedding over the infectious period, and how long an infected person

can be infectious. Studies show that the median incubation period is 5.1 - 6.4 days[9][9]. A recent study by Singapore NCID shows that the infectious period of symptomatic individuals may begin around 2 days before the symptom onset and persists for about 7 - 10 days after the symptom onset[11]. Virus shedding was found highest in the first 2-4 days from symptom onset and remain high during the first week of symptoms[12].
In most cases, the virus could not be detected after 21 days from the symptom onset[13]. Another study shows that the viral load of severe cases is 60 times higher than the mild cases, 90% mild cases cleared virus after 10 days from symptom onset, but all severe cases not[14]. Active viral replication drops quickly after the first week, and a viable virus was not found after the second week of illness despite the persistence of PCR detection of RNA[11][15].

Note that the shorter the *D* is for a given R_s, the faster the disease spreads, thus harder to control. From the studies so far, the COVID-19 infectious period is found between 10-20 days, with 10-days being the most severe condition, hence the most conservative assumption to use in modeling. In the following two plots, we use *D=10* days, and $\frac{S}{N} = 1$ as a conservative bound.

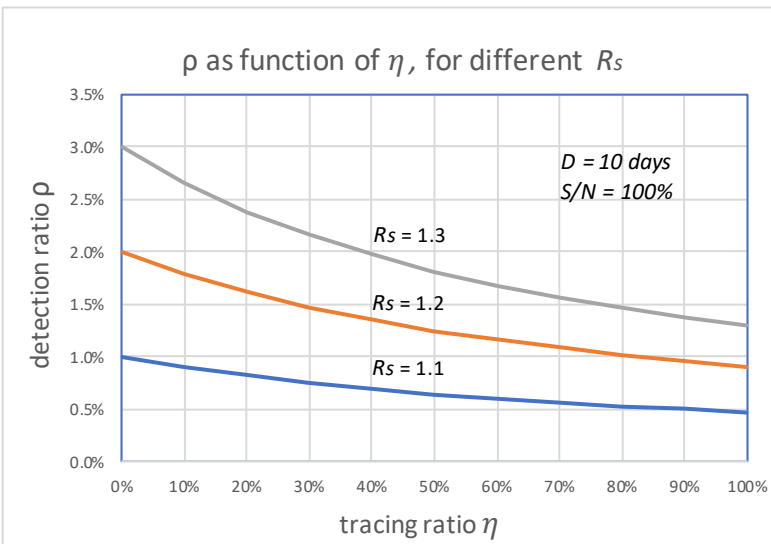

Figure 3. Daily detection ratio vs. daily tracing ratio, for different R_s

Figure 3 is the plot of daily detection ratio vs. daily tracing ratio, for R_s = 1.1, R_s = 1.2, and R_s =1.3, respectively. For R_s = 1.1, the maximum amount of detection we need to suppress the transmission is to catch 1% of the infectious population per day, assuming we do not do any tracing. If we can trace 100% of close contacts, we only need to detect 0.5% of the infectious population per day. For the scenario of R_s = 1.2, if we can trace only 50% of the close contacts, we would need to detect 1.3% of the infectious population per day.

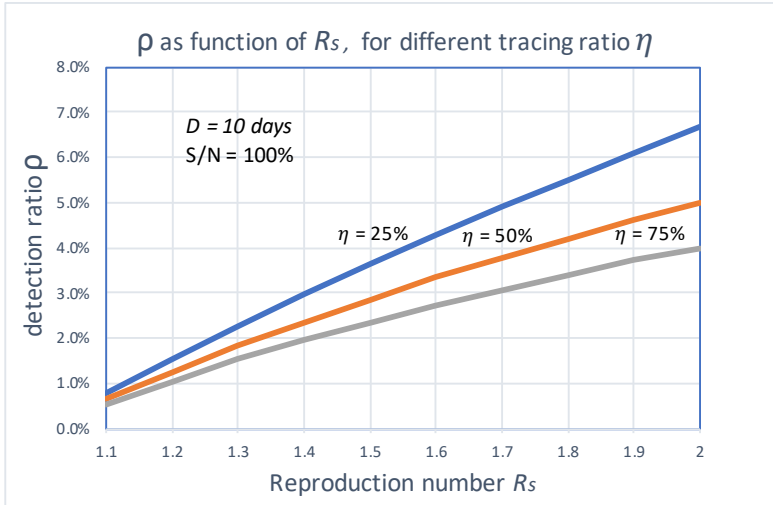

Figure 4. Daily detection ratio as a function of R_s for different tracing ratios

Figure 4 depicts the detection ratio as function of R_s for three different tracing ratios η = 25%, η = 50%, and η = 75%, respectively. We notice that as R_s increases, the quantity of detection required increases quickly. When R_s = 2.0, if we can trace 50% of close contacts, we would need to detect 5% of infectious people per day. It is also worth noting that when R_s is small, e.g., close to 1.0, tracing does not make as much a difference as when R_s is larger. For the given costs of the detection and the tracing, we can find the optimal quantities of testing and tracing to minimize the total cost. For example, as the testing becomes more available and its cost drops, if tracing is too hard to do, we may choose to do more testing than tracing.

In both Figure 3 and Figure 4, we assume $\frac{S}{N} = 1$ that is a conservative bound, since as the disease progresses, S keeps decreasing. As of May 28, 2020, both infection and seroconversion[5] surveys have been conducted in many places in the world. The UK government published data that as of May 24, 2020, 6.78% (95% confidence interval: 5.21% to 8.64%) of individuals from whom blood samples were taken tested positive for antibodies to the coronavirus[16]. The survey results from studies in Spain and France indicate that 5.0% and 4.4% of their populations respectively have ever contracted coronavirus[17]. In many metropolitan areas of the world, the seroconversion rate is much higher, for example, that of Boston is 10%[18], Madrid 11%[19], Moscow 14%[20], London 17%[19], and New York City 19.9% while New York State 12.3%[21]. With the above data, as of May 28, 2020, it seemed that for many European countries, the nationwide seroconversion rate had reached about 5%, while in many metropolitan areas, it has reached about 15%. That implies the $\frac{S}{N}$ has been reduced to at least 95% and 85%[6], respectively. In the following two figures, we plot the testing and tracing needed for these three values of $\frac{S}{N} =$ 95%, 90%, and 85%, respectively.

[5] Measuring the percentage of the population having developed antibodies from the past infections of SARS-CoV-2 virus.

[6] We assume these seroconversion test results are accurate and ignore the size of the population who are infected but have yet developed antibodies.

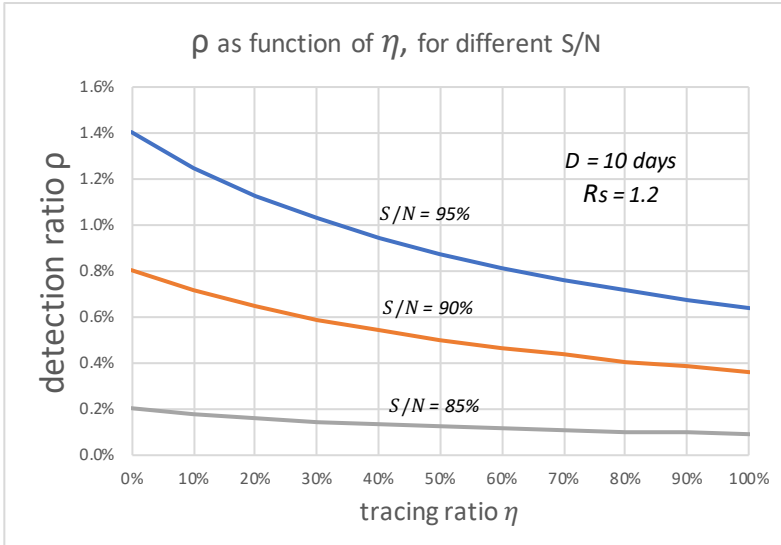

Figure 5. Daily detection ratio vs. daily tracing ratio, when Rs=1.2, for different S/N

In Figure 5, we can see that the value of $\frac{S}{N}$ can significantly affect the outcome. For example, for R_s =1.2 and when $\frac{S}{N} = 85\%$, if we can trace 50% of the close contacts, we need to detect only 0.13% of infectious people per day. Compared with when $\frac{S}{N} = 100\%$ (as shown in Figure 3), where we need to detect 1.3% of the infectious population per day, 0.13% is only 1/10 of the testing required.

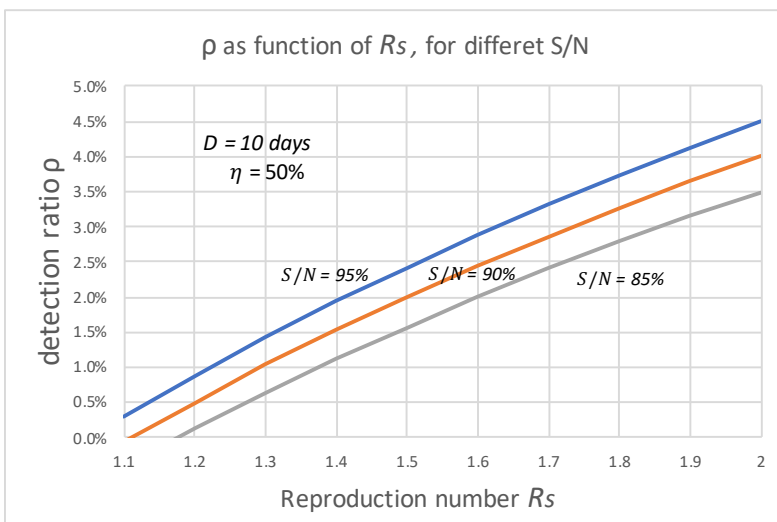

Figure 6. daily detection ratio vs. Rs, when η = 50%, for different S/N

In Figure 6, we can see that for $R_s < 1.1$ when $\frac{S}{N} \leq 90\%$

$$R_t = R_s \frac{S}{N} < 1$$

That means the disease will die out without needing to do any testing and tracing.

4. Discussion on Implementations

The first question we have in implementing the testing and tracing is: how do we know the detection ratio and tracing ratio achieved?

Let us first discuss the detection ratio. One way to estimate the detection ratio is to do a large-scale random infection survey over the population in consideration (except for those recovered and those tested positive with antibodies) to come up with the attack rate (the test-positive rate of the survey). With the attack rate established, we can know the detection ratio achieved.

To estimate the tracing ratio, we can count those close contracts traced who eventually become infectious for per infector, denoted as I_{ct}. Then the tracing ratio is

$$\eta = \frac{I_{ct}}{R_t}$$

While we can know the detection ratio right after the daily detection is done, we may have to wait for a few days (the average length of the incubation period of COVID-19 is 5.1 days) before we can count in all the close contacts who become infectious (assume we only test them when they have symptoms unless we test them every day).

The second question is how to optimize testing and tracing. For example, if our goal is to detect 1% of the infectious population per day. We can use a brute-force approach to accomplish such a goal: to test 1% of the entire population (except for those who tested positive or with antibodies). This approach assumes the infectious people are randomly distributed in the entire population, which is certainly not true; thus, we can do a better job than the brute-force approach. With a given testing capacity, we can test the groups in the population with the highest risk of contracting the virus first. For example, we should test anyone who has suspected symptoms and encourage everyone who suspects themselves having symptoms to come to a test. The survey[16] in the UK showed that the test-positive rate of those with specific symptoms (reporting having cough, fever, and loss of taste or smell) is 6.7%, that of people without symptoms is only 0.4%, while that of those with any one of the symptoms is 2.6%. In the same survey, the attack rate was given as 0.43%; if we apply all the testing capacity to those with specific symptoms, we can detect 1% of infectious people with testing only (0.43/6.7)/100 = 0.06% of the population. If we apply the testing capacity to those with any one of the symptoms, we need only to test (0.43/2.6)/100 = 0.17% of the population to detect 1% of infectious people. These represent much improvement over the brute-force approach.

In practice, we need to categorize the entire population into groups according to their risk levels. For example, in the UK, those who reported working in patient-facing healthcare

workers have 1.73% tested positive, including NHS (National Health Service) professionals, such as nurses and doctors, as well as social care workers, such as nursing home or home care workers. In comparison, the percentage of people reporting not working in these types of roles testing positive rate was much lower at 0.38%[16]. We need to do more of such surveys for different groups of the population. We can detect more infectious people with the minimum testing capacity if we can apply limited testing capacity to the highest-risk groups.

The third issue in implementation is how to estimate R_s of the region of the consideration, or equivalently how to estimate R_t (since we can estimate $\frac{S}{N}$ by doing a seroconversion survey, we can have R_s when we know R_t from *Eq. 7*). The estimation of R_t has been discussed extensively in the literature, and tools are also provided[8][22][23][24][25]. Websites such as https://rt.live/ also provide the real-time estimation of the R_t for all 50 states of the US.

5. Applications of the Model

The model developed in this paper is the most appropriate for situations where there are already a large number of infected people spread out in the community, like in the US and many other European countries. For countries like China where after a period of strict lockdown, the new cases come to almost zero, or Taiwan, where they did excellent job suppressed the infections from very beginning to a minimal number[26], they do not need to do a large amount of testing to detect the infectious people from the population. Given there are so few new cases in these places, all they need to do is pay close attention to any new cases, including screening out all imported cases and tracing all close contacts of these new cases.

This model should apply to any relatively isolated communities, such as a country, a state, a metropolitan area, or even a remote town. As many private employers are taking the testing into their own hands, this model may or may not apply to a company where their employees have frequent interactions with members outside the company.

6. Conclusion

With social-distancing measures in place, the reproduction number of COVID-19 has been significantly reduced in all places. It might have been reduced to below 1 in places where more disciplined social-distancing is practiced, such as in Japan. In such places, extensive testing and tracing may not be needed. However, in other places of the world, depending on the scale and degree of the reopening, the reproduction number may come back to be higher than 1. In these places, we can rely on conducting a reasonable amount of testing and tracing to suppress the new waves of infections, before any effective drugs and vaccines become available. The model developed here can provide quantitative guidance on how to deploy the testing and tracing resources optimally.

Biography

Victor Wang got his Ph.D. from Stanford University. He is Managing Partner of AimTop Ventures in Palo Alto, California. His Ph.D. training was in the fields of signal processing, machine learning, and networking theories. He has invested healthcare companies of AI-based diagnosis tools, immuno-therapies, new-drug discovery platforms, and molecular imagining instruments. Contact info: vwang@aimtopvc.com

References:

[1]. Fred Brauer, Carlos Castillo-Chavez, and Zhilan Feng. Mathematical Models in Epidemiology (Texts in Applied Mathematics Book 69). Springer 2019

[2]. Compartmental models in epidemiology. Wikipedia. https://en.wikipedia.org/wiki/Compartmental_models_in_epidemiology

[3]. Latent Period (epidemiology). Wikipedia. https://en.wikipedia.org/wiki/Latent_period_(epidemiology)

[4]. Arnold Bosman. Incubation period, Latent period and Generation time. Field of Epidemiology Manual Wiki. https://wiki.ecdc.europa.eu/fem/Pages/Incubation period, Latent period and Generation time..aspx

[5]. Ying Liu, Albert A. Gayle, Annelies Wilder-Smith, and Joacim Rocklöv. The reproductive number of COVID-19 is higher compared to SARS coronavirus. Journal of Travel Medicine, Volume 27, Issue 2, March 2020. https://academic.oup.com/jtm/article/27/2/taaa021/5735319

[6]. Pan A, Liu L, Wang C, et al. Association of public health interventions with the epidemiology of the COVID-19 outbreak in Wuhan, China. JAMA. Published online April 10, 2020. doi:10.1001/jama.2020.6130

[7]. Leung N, Chu D, Shiu E, Chan KH, McDevitt J, Hau B et al. Respiratory virus shedding in exhaled breath and efficacy of face masks. Nature Medicine, April 3 2020. https://www.nature.com/articles/s41591-020-0843-2

[8]. Luís M. A. Bettencourt, Ruy M. Ribeiro. Real Time Bayesian Estimation of the Epidemic Potential of Emerging Infectious Diseases. PLOS ONE. May 14, 2008 https://doi.org/10.1371/journal.pone.0002185

[9]. Lauer S, Grantz K, Bi Q, Jones F. The Incubation Period of Coronavirus Disease 2019 (COVID-19) From Publicly Reported Confirmed Cases: Estimation and Application. March 10, 2020. Annals of Internal Medicine https://www.acpjournals.org/doi/10.7326/M20-0504

[10]. Backer JA, Klingkenberg D, Wallinga J. Incubation period of 2019 novel coronavirus (2019-nCoV) infections among travelers from Wuhan, China, 20-28 January 2020. Euro Surveill. 2020 Feb;25(5). https://www.ncbi.nlm.nih.gov/pubmed/32046819?dopt=Abstract

[11]. Position Statement from the National Centre for Infectious Diseases and the Chapter of Infectious Disease Physicians. Academy of Medicine, Singapore. May 23, 2020. Singapore study on infectious period

[12]. Wölfel R, Corman V, Guggemos W, Seilmaler M, Zange S, Müller M, et al. Virological assessment of hospitalized cases of coronavirus disease 2019. Nature 581, 465-469 (2020), April 1, 2020. https://www.nature.com/articles/s41586-020-2196-x

[13]. Zou L, Ruan F, Huang M, Liang L, Huang H, Hong Z. et al. SARS-CoV-2 Viral Load in Upper Respiratory Specimens of Infected Patients. N. Engl. J. Med. 382, 1177–1179 (2020). https://www.nejm.org/doi/10.1056/NEJMc2001737

[14]. Liu Y, Yan L, Wan L, Xiang T, Le A, Liu J et al. Viral dynamics in mild and severe cases of COVID-19. Lancet, March 19, 2020. https://www.thelancet.com/journals/laninf/article/PIIS1473-3099(20)30232-2/fulltext

[15]. He X, Lau E, Wu P, Deng X, Wang J, Hao X et al. Temporary Dynamics in Viral Shedding and Transmissibility of COVID-19. Nat. Med. April 15 2020. 2020 May; 26(5):672:675 https://pubmed.ncbi.nlm.nih.gov/32296168/

[16]. UK. Coronavirus (COVID-19) infection survey Pilot: May 28. Office for National Statistics. The link to the survey

[17]. Jacqui Wise. Covid-19: Surveys indicate low infection level in community. BMJ 2020;369:m1992 doi: 10.1136/bmj.m1992 (Published May 18 2020)

[18]. https://www.boston.com/news/coronavirus/2020/05/15/boston-coronavirus-antibody-testing-results

[19]. The Conversation. Herd immunity in Europe – are we close? https://theconversation.com/herd-immunity-in-europe-are-we-close-139253

[20]. 14% of Healthy Russians Have Coronavirus Antibodies, Private Lab Says https://www.themoscowtimes.com/2020/05/22/14-of-healthy-russians-have-coronavirus-antibodies-private-lab-says-a70353

[21]. https://www.governor.ny.gov/news/amid-ongoing-covid-19-pandemic-governor-cuomo-announces-results-completed-antibody-testing

[22]. A. Cori, N.M. Ferguson, C. Fraser, and S. Cauchemez. A New Framework and Software to Estimate Time-Varying Reproduction Numbers During Epidemics [link] 2013. American Journal of Epidemiology, Vol 178(9), pp. 1505-1512. DOI: 10.1093/aje/kwt133

[23]. Burr T1, Chowell G. "The reproduction number R(t) in structured and nonstructured populations." Math Biosci Eng. 2009 Apr;6(2):239-59, https://www.ncbi.nlm.nih.gov/pubmed/19364151

[24]. Thompson R, Stockwin J, Gaalen R, Polonsky J, Kamva Z, Demarsh P, et. al., "Improved inference of time-varying reproduction numbers during infectious disease outbreaks" Epidemics, Volume 29, December 2019, https://www.sciencedirect.com/science/article/pii/S1755436519300350

[25]. Zhao S, Cao P, Gao D, Zhuang Z, Cai Y, Ran J, et al., "Serial interval in determining the estimation of reproduction number of the novel coronavirus disease (COVID-19) during the early outbreak", *Journal of Travel Medicine*. taaa033, https://doi.org/10.1093/jtm/taaa033

[26]. Wang J, Ng C, Brook R. Response to COVID-19 in Taiwan Big Data Analytics, New Technology, and Proactive Testing. Journal of American Medical Association, March 3, 2020. https://jamanetwork.com/journals/jama/fullarticle/2762689