Multilevel Integrated Model with a Novel Systems Approach (MIMANSA) for Simulating the Spread of COVID-19

Arpita Welling[1], Abhilasha Patel[1], Padmaj Kulkarni[2], Vinay G. Vaidya[1,3]

1 Applied Research Group, Pi Innovate, Pune, India
2 Department of Medical Oncology, Deenanath Mangeshkar Hospital, Pune, India
3 Department of Technology, Savitribai Phule Pune University, Pune, India.

Abstract

COVID-19 has affected people's lives all over the world. It has created a perplexing situation about what actions one should and should not take. Mathematical modeling of biological systems is challenging and gives a different perspective, especially in decision making under multiple complex scenarios.

Public health officials grapple with multiple issues such as recommending a lockdown, contact tracing, promoting the mask usage, social distancing, and frequent handwashing, as well as keeping the families of patients in isolation for the incubation period. It is even more challenging to find the optimal combination of all of the above without the use of a suitable mathematical model.

There are many different approaches to modeling the spread of SARS-CoV-2, the virus that causes COVID-19. Some models are easy to use, while others need extensive use of high-end computers. However, models to assist public health official's decision making are hard to find.

In this paper, we discuss a novel systems approach to building a model for simulating the spread of COVID-19. The model, MIMANSA, divides an individual's in-person social interactions into three areas, namely home, workplace, and public places. While tracking the in-person interactions, the model follows the virus spread. Internally, the model labels healthy people who turn into silent carriers, virus-infected patients, or healthy carriers. It tracks down to the smallest level of a single day interaction. As and when a new silent carrier is created, the model automatically expands and builds a network of virus spread. All single-day blocks are integrated to get the final result. MIMANSA is novel due to its ability to build a virus spread network as a multilevel, integrated model, and in the end, enable one to make complex decisions with ease.

MIMANSA is trained and validated using the data from the www.COVID-19India.org website. It does not use any arbitrary constants. All its parameters have a physical significance and are measurable. Once trained, the parameter estimation is complete, and the model is ready to run multiple scenarios.

MIMANSA has four control mechanisms that a user can use. It helps one simulate the what-if scenarios. The first one is to control the exposure level to the virus depending on the

---

Keywords: Coronavirus; COVID-19; SARS-CoV-2, Epidemiology; India COVID data; Systems Modeling; Mathematical Modeling

Email for correspondence: vinay.vaidya@piinnovate.com, vaidya.vinay@gmail.com

number of hours spent with a silent carrier. The second provides control over the infection rate or the probability of a healthy person getting infected in the presence of a silent carrier. The third one allows the user to control lockdown effectiveness percentage, and the fourth one gives control over quarantine percentage.

Inside the model, MIMANSA differentiates between virus-infected patients, silent carriers, and healthy carriers. MIMANSA has the capability to consider variations in virus activity levels of every asymptomatic patient, varying the exposure to the virus, and varying the infection rate depending on the person's immunity.

MIMANSA can simulate scenarios to study the impact of many different conditions simultaneously. MIMANSA assists public health officials in complex decision making, enables scientists in projecting the SARS-CoV-2 virus spread, and aids hospital administrators in management. MIMANSA will play a significant role in finding the balance between the effect of strict lockdown on the economy vs. the marginally high number of COVID-19 patients with a bit relaxed lockdown.

1. Introduction

Mathematical modeling of COVID-19 (Coronavirus Disease identified in 2019) is essential for many reasons. It helps understand how COVID-19 may grow, what will be the scale of the number of cases in a given region, and how to get ready for handling it. Another important aspect is that a good model will enable administrators to come up with the right public policies. There are many questions that public policymakers have. Should one go for a lockdown of a city? If so, what is the correct duration before the lockdown is lifted? What is the impact of identifying and isolating silent carriers? How many hospital beds are required? How many ICU beds, and how many ventilators are needed? Questions are related to the effect of an increase in the number of cases, the impact of lockdown, lifting of the lockdown, mask usage, social distancing, contact tracing, and isolation. Although there are many attempts by now to develop mathematical models of COVID-19, it comes short of answering questions related to the impact of multiple measures and policies when they are implemented simultaneously.

In this paper, we present a novel approach by considering the SARS-CoV-2 (Severe Acute Respiratory Syndrome Coronavirus 2) infection as a conglomeration of multiple systems. Our model, Multilevel Integrated Model with A Novel Systems Approach (MIMANSA), is built from epidemiological observations and data. It is well known that studying the asymptomatic population is vital in the study of the spread of COVID-19. The simulation of silent carriers is at the root of MIMANSA. Inside the model, MIMANSA differentiates between virus-infected patients, symptomatic patients, and asymptomatic patients.

It considers three groups of interaction and viral spread, namely home, workplace, and public places. It is built on globally acceptable, observations related to the spread of SARS-CoV-2. It has provisions for simulating Non-Pharmaceutical Interventions such the

lockdown, and quarantine. It can also simulate scenarios to study the impact of following the recommended precautions such as mask usage, social distancing, and frequent hand washing. Once trained, it can also highlight the deviations of lockdown compared to the nominal. It has multiple features that enable studying several different scenarios.

MIMANSA can treat every sudden increase in the number of cases as a cluster and simulate it independently. It goes down to the level of day-to-day interactions and continues to automatically expand the model depending on the presence of new silent carriers. MIMANSA only requires knowing how many silent carriers are present at the start. If it is not known, it presumes that there is only one silent carrier.

Its output continues to fuel the model to run until the last asymptomatic patient is cured. The model not only considers the virus transmission from an asymptomatic patient but also takes in to account spread due to fomite contamination.

During the training phase, MIMANSA, estimates parameters to get the best fit to the actual data. While running the simulations and what-if scenarios, one can control some major parameters.

2. Literature Review

There is a lot of interest in the research community to help in the current COVID-19 pandemic. There are thousands of papers being published on COVID-19. Here we will review some of the papers related to modeling of the COVID-19.

There is a vast amount of literature available on the curve-based models. These models include exponential, Gompertz, Bertalanffy, and Logistic. All of them are prominent in different scenarios. A good review of these four models is given by Vaidya, Alexandro [30]. All of these have been tried for COVID-19 simulation.

The exponential model is one of the most widely used models for the growth of any organism. Although simple to use, it has several drawbacks. It presumes limitless growth. Although suitable for measuring early behavior, it starts failing rapidly. The growth in COVID-19 patients does not follow the exponential curve. It is more of a 3rd order polynomial than exponential growth.

Gompertz equation is a classical model that puts limits on growth. It is also known for replicating the initial growth period quite well. However, it lacks any physical significance to parameters [31]. The most important in model development is to develop a model with parameters that have a physical significance. This is the same philosophy we have used in the development of the model described in this paper.

Von Bertalanffy came up with a growth model that had some measurable physical parameters with significance in biology. Thus, the usefulness of the model is more than other ad-hoc models. Von Bertalanffy was the one who first proposed a systems approach to biology [3].

Jia et al. [16] use Gompertz, Bertalanffy, and Logistic equations for modeling the growth of COVID-19. Since all of these are good from a curve fitting perspective, but they do not help in considering multiple scenarios that arise in the management of COVID-19.

The logistic equation is another popular model. Villalobos and Mario use a generalized logistic equation and the Gompertz equation for fitting COVID-19 data from China [33]. This model also suffers from the lack of having any significance to its parameters. It does not have the capability to handle various issues such as lockdown, quarantine, etc.

Time series analysis using the Auto Regressive Moving Average (ARMA) models is another popular approach. This approach has been tried by Deb et al. [9] on COVID-19. Although it gives initial success in prediction, the success does not last long when the growth rate of cases suddenly changes due to either a sudden outbreak or due to a group of people getting together in large numbers. There is no provision for adding new silent carriers inherent in the ARMA model. If there is a sudden increase in the numbers due to unknown external factors, one has to recalculate the entire model.

Fanelli and Piazza [11] forecasted cases in China, Italy, and France based on the classical SIRD model. In this approach, the Susceptible (S), Infected (I), Recovered (R), and the Dead (D) model, every person who is going to be infected by the virus, falls in one of the four categories. Then the equations are set up as first-order differential equations with one differential equation per stage. Wang et al. [35] present their work on the transmission dynamics of SARS-CoV-2. They used the SEIRD model for the Wuhan data. Mandal et al. [21] used an SEIR model and suggested that screening at the port of entry for India may result in some delay in getting the Coronavirus in the country. However, screening at the port alone may not suffice in delaying the outbreak. Parodi and Liu [24] also address the containment issue.

Kucharski et al. [1] studied the early dynamics of transmission. They modeled SARS-CoV-2 using a geometric random walk process and Monte Carlo simulation. Grassly and Fraser [22] have given a good review of mathematical models of infectious disease transmission. Klinkenberg et al. [18] developed a model for contact tracing.

Liang [17] uses differential equations and considers growth as proportional to the count of infected persons. This formulation leads to the solution involving exponential terms. Thus, the output becomes exponential. However, the spread of SARS-CoV-2 is like a binary tree, and it leads to a curve that is in terms of the N raised to K as shown below.

$$N = N_0^K$$

It is not the type of equation, as shown below.

$$N = N_0 e^{(-\lambda t)}$$

Cakir [4], models COVID-19 based on Edwards and Penny [12]. It is interesting to note that Edwards and Penny state in the book that

"the time-dependent change (spreading) rate of the H; the number of individuals who have caught a contagious disease is proportional to the multiplication of the numbers of those who have caught the disease and those who have not" [12]

$$dH/\,dt = \mu H(P - H)$$

Chen et al. [6] developed a phase-based model. This considers a Bats-Hosts-Reservoir-People transmission network for developing a model of SARS-CoV-2 transmission.

While doing research, it is often difficult to get the right information and to get the right kind of data. There are many good sites that help in this matter. The CDC website [5] is one such site where you get answers to many questions. For actual daily count, we found the Worldometers [39] to be a good site. Additionally, Website UpToDate [36] and Rothan et al. [37] are good sources for epidemiological information.

2.1 Systems Approach

The systems approach was first suggested by Von Bertalanffy [34]. In this approach, a system is broken down into small subsystems. The subsystems are open to interacting with the environment as well as with each other. One time you may see parts of the whole system while other times, you may like to view the whole system from parts. Each subsystem is built on observed facts. All subsystems integrate together and keep the observed phenomenon unperturbed. In 1985, Vaidya et al. [31] used the systems approach and developed a model for tumor growth and chemotherapy. Later, in 1991, Vaidya et al. could show the effect of fasting on reducing tumor growth by using a systems approach [32]. The 'Multilevel Integrated Model with a Novel Systems Approach' (MIMANSA) is built using the same principles.

3. Mathematical Model

The 'Multilevel Integrated Model with A Novel Systems Approach' (MIMANSA) developed here is based on empirical data and global epidemiological observations of the COVID-19. We have built this model by applying the principles of classical control systems theory. First, we studied the current understanding of the SARS-CoV-2 virus spread. All the primary virus spread related observations useful for building the model are given below.

Observation 1: The virus spread occurs due to a virus carrier meeting a healthy person.

Observation 2: A healthy person may get infected if he touches a fomite.

Observation 3: When allowed to operate without restrictions, silent and healthy carriers are responsible for the spread of the virus.

Observation 4: For all reporting, the unit of time is one day. When COVID-19 patients test positive, they are counted in the total number of cases, and this count goes into the total number of new cases identified on that day. Similarly, every day, new silent carriers are created.

Observation 5: Virus-infected persons do not come out as patients on day 1. There is a 2 to 14-day incubation period for SARS-CoV-2. It is observed that most patients start showing symptoms on 5th, 6th, or the 7th day after the infection. [28] Lauer et al. [20] estimated the SARS-CoV-2 incubation period from Wuhan data. They concluded that in 97.5% of the cases, which will eventually show symptoms will do so in 11.5 days.

The following assumptions are made for the development of the model.

1. Infected patients spread the virus only until the incubation period is over, and symptoms start showing. When symptoms show, it is presumed that the patients are hospitalized or isolated, thus reducing any further possibility of spread among non-infected people. Silent carriers and healthy carriers are the ones who spread the virus.
2. The SARS-CoV-2 virus remains in aerosols for up to 3 hours, copper surfaces for up to 4 hours, and on cardboard for 24 hours. On plastic and stainless steel, it can remain for up to 2 to 3 days [23]. For simplicity, we consider the period of the virus remaining on a surface to be 24 hours.

Our model is based on person to person virus transmission. If we have to emulate it, one needs to know how many people a person meets every day on average.

To understand the spread of diseases, Del Valle et al. studied how people from different age groups interact socially [10]. Fig. 1 shows the outcome of their study. The graph shows the number of contacts per day vs. age. In their study, they found that on average, between the ages of 20 and 50, a person meets 22 people every day. We have used this number to simulate the spread of SARS-CoV-2.

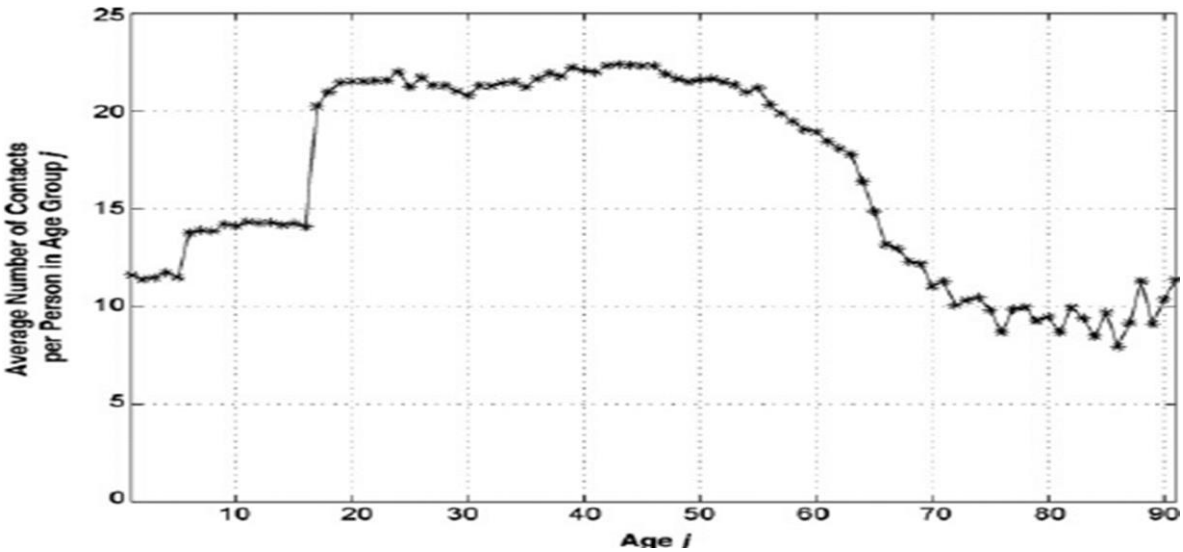

Figure: 1: Average number of contacts per person in the age group (From Del Valle, 2007)

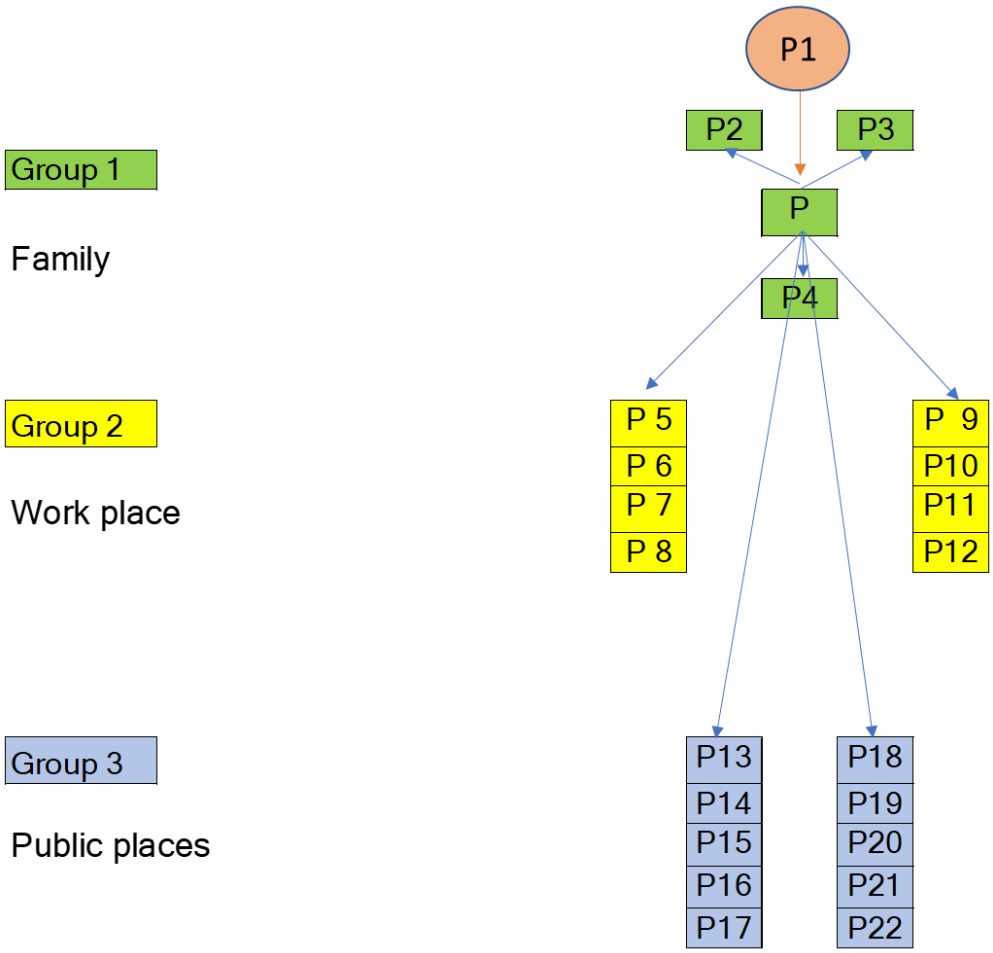

Figure 2: Groups of transmission from a silent carrier, P1

In Fig. 2, we have considered three groups. It is important to note that there is only one individual who interacts between all three groups. There is no inter-group interaction of any member other than P. All events are assumed to have taken place in one day. The time unit for the simulation is considered to be one day.

3.1 Definitions:

Some of the important terminologies used in this paper are given below.

A Virus-infected Person (VP) is a patient that is evaluated clinically and tested positive for COVID-19.

A Silent Carrier (SC) is a person who is infected with the virus but is not considered a patient. The silent carriers include persons who are asymptomatic carriers and those who show mild symptoms that do not get tested.

A Healthy Carrier (HC) is a person who is not infected with the virus but carries the virus via fomites. Fomites are materials such as a book, a bag, clothes, utensils, etc. that have been contaminated by the virus and serve as a mode of transmission. Healthy carriers will test negative for SARS-CoV-2.

We define three levels of Exposure Rates (ER). The ER (1) is the exposure level at the highest level. The ER (2) is the medium exposure level, and the ER (3) is the low exposure level. The exposure rate is the probability of getting exposed while interacting with silent carriers. The ER depends on many factors, such as the distance between two people, open or enclosed space, the number of people per 100 sq.ft., the number of hours spent together, humidity, etc.

The following is a detailed list of the terminology and definitions used in this paper.

Terminology Used	**Definitions with explanation**
CB	The computational block inside which all calculations for a specific level and for a specific day take place.
CPDFVP	Distribution of CVP based on PDF
CTQ	Contact Tracing, and Quarantining parameter varies from 0 to 1.
CVP	Cumulative Virus-infected Patients is termed as CVP
DC	Cumulative number of Deceased Cases at time t

Terminology Used	Definitions with explanation
Exposure Rate (ER)	The exposure rate is the probability of getting exposed while interacting with silent carriers. The ER (1) is the exposure level at the highest level. The ER (2) is the medium exposure level, and the ER (3) is the low exposure level.
Healthy Carrier (HC)	A Healthy Carrier (HC) is a person who is not infected with the virus but carries the virus through fomites.
Healthy Carrier Rate (HCR)	The rate of conversion of a healthy person into an infected person due to coming in contact with a fomite is called the Healthy Carrier Rate (HCR).
Infection Rate (IR)	IR is the probability of getting infected if one is exposed to the virus.
Input 1	The number of silent carriers at the start of the simulation
IPD	Inter-Process Diagram
L	Levels indicate the depth of the infection network
LKD (LKD2, LKD3)	The lockdown parameter varies from 0 to 1. LKD 2 is for group 2, and LKD 3 is for group 3
MR	Mortality Rate
N1(L, t)	The number of people involved in the first group, from level L, and at time t
N1, N2, N3	The number of people involved in interactions in every group is called N.
NPI	The Non-Pharmaceutical Interventions, NPI, considered in this paper, are lockdown (LKD) and contact Tracing and Quarantining (CTQ).

Terminology Used	Definitions with explanation
PDF	Probability Distribution Function
PDFSC	Silent Carriers coming out PDF
PSCP	Probability-based Silent Carriers ready to Proliferate on the next day
RR	Recovery Rate
SCE	External Silent Carriers
SCP	Silent Carriers at Present for starting their virus spread network
SHVP	The Sum of the Hidden Virus-infected Patients in the last 14 days
Silent Carrier (SC)	A Silent Carrier (SC) is a person who is infected with the virus but is not considered a patient.
Silent Carrier Rate (SCR)	SCR is the rate of conversion of a healthy person into a silent carrier when a healthy person meets with a silent carrier.
SSC	The Sum of the Silent Carriers is SSC
t	time in days
TCTQ	Time at which Contract Tracing and Quarantining is enforced

Terminology Used	Definitions with explanation
TSC	Total Silent Carriers after applying the RF and CTQ
VACTIVE	Cumulative number of Active Cases at time t
Virus-infected Person (VP)	A Virus-infected Person (VP) is a patient that is evaluated clinically and tested positive for COVID-19.
VP1, VP2, VP3	The suffix attached to any variable, such as VP1, for example, indicates the group from where the infection occurred. The numerals 1,2, and 3 indicate an infection in group 1, group 2, or group 3.
VPPDF	Virus-infected people coming out of the PDF

3.2 Internal Processing Diagram (IPD):

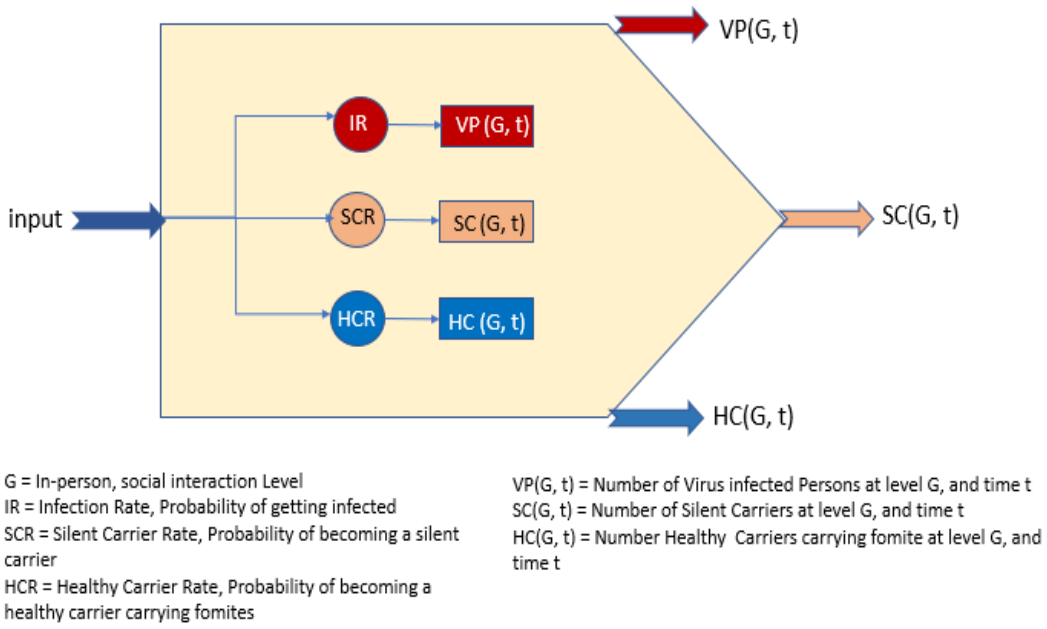

Figure 3: Internal Processing Diagram - the division of people as per their state of infection

Fig.3 is an Internal Processing Diagram (IPD). This diagram shows what happens to every healthy person who comes in as a part of the input. Inside the Internal Processing Diagram, the input is converted into three outputs, namely Virus-infected Patients (VP), Silent Carriers (SC), and Healthy Carriers (HC). These three outputs come from the right side of the diagram. Throughout this paper, when the IPD is drawn as a small block, the virus-infected patients will come out from the top, silent carriers will come out from the middle, and the healthy carriers will come from the bottom.

The virus-infected patients are in the incubation period of 14 days and may show symptoms anytime within the 14-day window [19]. In MIMANSA, we use a probability density function to simulate the same effect as the incubation period.

Based on initial epidemiological data from the WHO Q&A session on March 17, 2020, 80% of infections are mild or asymptomatic, 15% have a severe infection, 5% are critical infections, and they need ventilation. It is also reported that 50% of the patients are asymptomatic [7]. Using this data, we were able to define broad ranges for Infection Rate (IR), Silent Carrier Rate (SCR), and Healthy Carrier Rate (HCR).

3.3 Computational Block

The following diagram shows the internals of a Computational Block (CB). All calculations in a computational block are equivalent to the activities taking place in a single day.

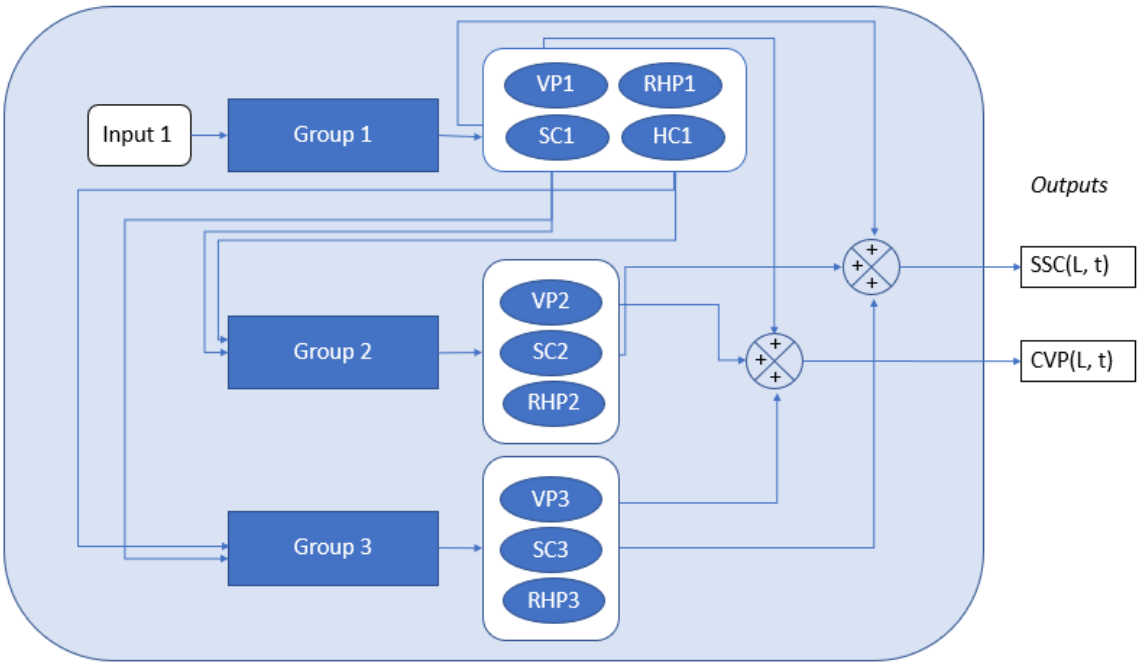

Acronyms:

VP1, VP2, VP3 are Virus infected patients coming from group 1,2, and 3 respectively
SC1, SC2, SC3 are Silent Carriers, asymptomatic and mildly symptomatic patients, coming from group 1,2,and 3 respectively
HC1 are Healthy Carriers, carrying fomites, coming from group 1
RHP1, RHP2, RHP3 are Remaining healthy people in each group 1,2, and 3
SSC is the Sum of Silent Carriers
CVP is the Cumulative Virus infected people

Figure 4: Internals of a Computational Block

Inside a computational block, there are computations for each of the in-person interactions within each group 1, 2, and 3. The output of a computational block is the total silent carriers (SSC), and the total Virus-infected patients (CVP).

The healthy carriers (HC) are people who are not infected, but they carry fomites. Thus, they are external carriers. Since one computational block simulates one day, i.e., 24 hours, HCs are not carried forward to other blocks, and thus they are not one of the outputs of the computational block.

All computational blocks are integrated at the end to get the final result. The only interaction between the blocks is to transmit the virus through the silent carriers who meet yet another group of family, colleagues, and individuals in public places.

3.4 The Virus Proliferation Network:

When one cycle of the day is over, the Sum of the Silent Carriers (SSC), and Cumulative Virus-infected Patients (CVP) are reported by the public health administrators. The computational blocks for that day are closed.

The next day, the person P, in our example, meets the same people from group 1, and group 2. It is likely that P meets different people from public areas. However, for simplicity, it is assumed that P meets the same people from the group 3 as well if one goes to the same grocery store, catches the same bus or a train, and meet the same people. From each of these three groups, some people get infected on day 1 itself, but not all of them do. The remaining healthy people from the previous day, again interact the next day with the same silent carrier. Thus, we need to treat these remaining healthy people differently. In our simulation, MIMANSA, we transfer the remaining healthy people to another horizontal block, and that is the day 2. In a horizontal block shown in Fig. 5, we have the same people interacting with each other.

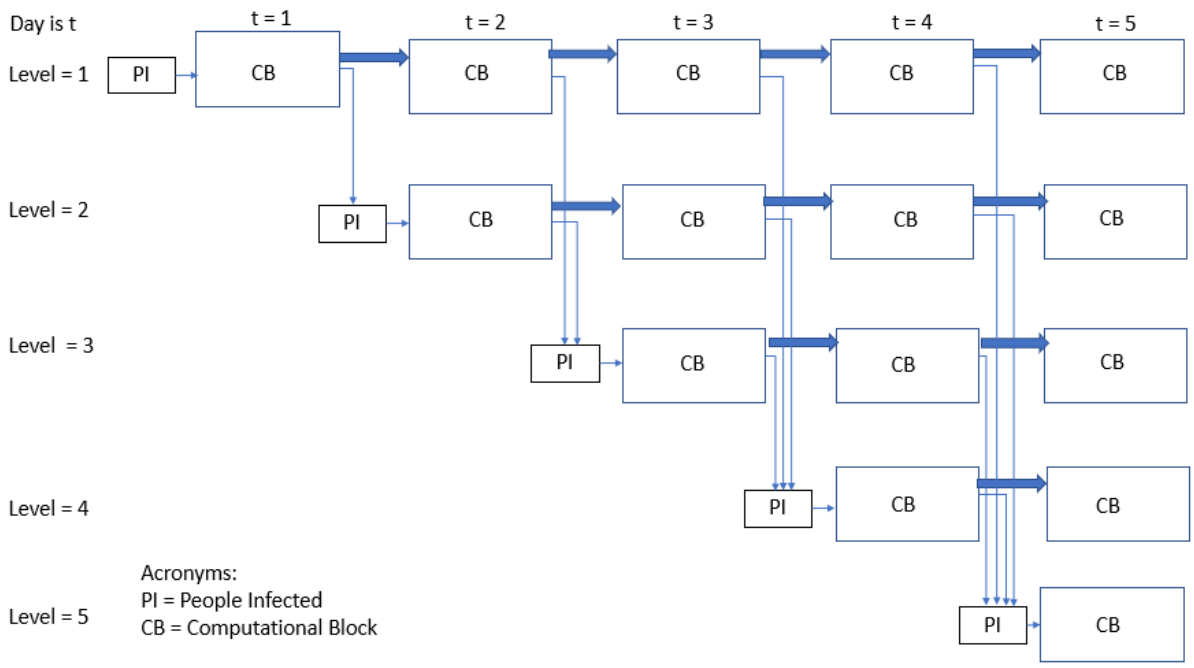

Figure 5: Virus proliferation network

Each day, the chain of spread from the newly created silent carriers, created from the day prior, is represented on a new level. Consider, for example, P6 from group 2 and P 12 from group 3 have become silent carriers on day 1 (Fig. 2). Both P6 and P12 have their respective families and a different network of people they interact, averaging 22 interactions each. To represent that, we create a new level, level 2. This is a vertical block in Fig. 5. Vertical blocks are created whenever there are new possibilities for the in-person interactions in the network. The new levels are started by all the silent carriers coming from the top levels. If we are at level 20, we add all the silent carriers from level 19 and going back to level 5. This covers 14 levels in the past. The reason for going all the way up to 14 levels and no more is due to the incubation period of SARS-CoV-2 being 14 days. There is no silent carrier that would continue to be a silent carrier beyond 14 days. This is how the virus spreads its network. In a horizontal block, it is the intra-group transmission while in a vertical block, it is the inter-group transmission.

3.5 Virus Spread within the Family

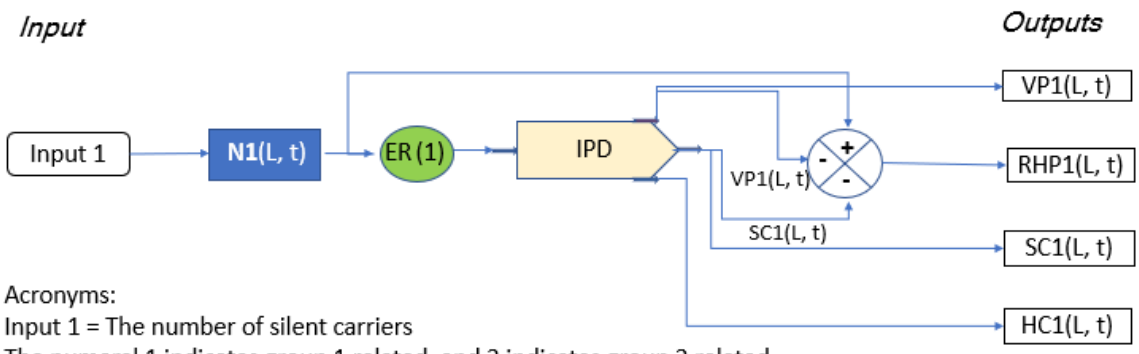

Acronyms:
Input 1 = The number of silent carriers
The numeral 1 indicates group 1 related, and 2 indicates group 2 related.
N1(L, t) = the number of people involved in the first group
L = Levels indicate the depth of infection network
t = time in days
ER(1) = Exposure rate. The number 1 indicates the highest level of interaction with a silent carrier
IPD = Inter-Process Diagram
VP1(L, t) = Virus-infected Person in group 1
SC1(L, t) = Silent Carriers in group 1
RHP1(L, t) = Remaining Healthy people in group 1 who are not yet infected
HC1(L, t) = Healthy Carriers who are carrying fomites

Figure 6: Group 1: The virus spread within the first group

As it is explained in the description of Fig. 2, in MIMANSA, the process of virus spread starts with the first silent carrier who comes from abroad. Input1 in Fig. 6 is the arrival of the first silent carrier. In the simulation, there is a provision for multiple silent carriers coming into a place and starting the process. The input 1 is multiplied by the first group of healthy people (N1), that the silent carriers meet. These people pass through an internal processing diagram (IPD). Once exposed to silent carriers, the healthy people can be either marked as Virus-infected Patients (VP), new Silent Carriers (SC) Healthy Carriers (HC), or remain healthy as the Remaining Healthy people (RHP). Throughout the paper, color red indicates a virus-infected person -related boxes, blue indicates healthy people, and brown indicates a silent carrier-related box.

3.6 Virus Spread at Workplaces

The next figure, Fig. 7, describes the spread of the virus in group 2, i.e., workplaces.

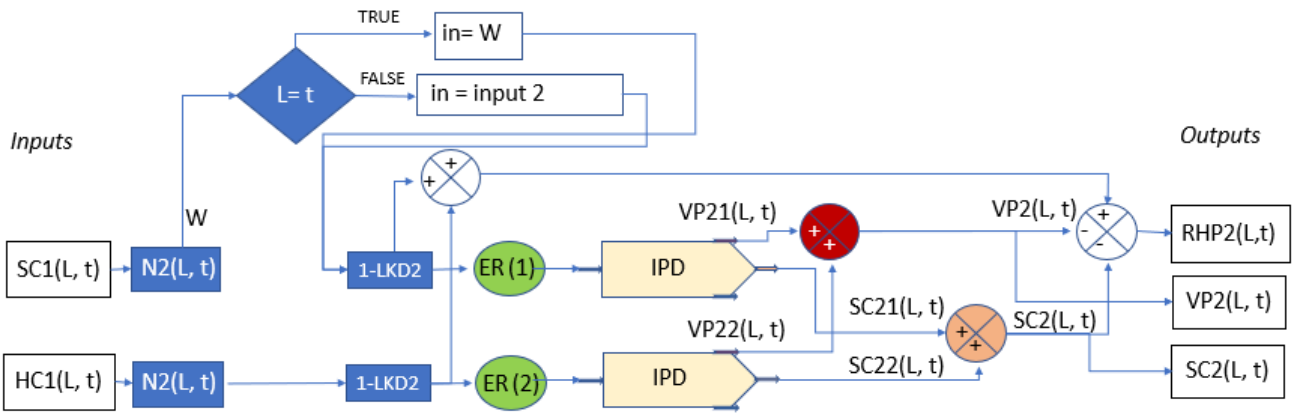

Acronyms:
The numeral 1 indicates group 1 related, and 2 indicates group 2 related.
SC1(L, t) = Silent Carriers in group 1
HC1(L, t) = Healthy Carriers who are carrying fomites
N2(L, t) = the number of people involved in the second group.
LKD2 = fraction of the people adhering to the lockdown norms in second group
ER(1) = Exposure rate. The number 1 indicates the highest level of interaction with a silent carrier
ER(2) = Exposure rate. The number 2 indicates the middle level of interaction with a silent carrier
IPD= Inter-Process Diagram
VP21 and VP22 are divisions of the total VP2. SC21 and SC22 are divisions of SC2. This is due to different inputs.
VP2(L, t) = Virus-infected Persons in group 2
SC2(L, t) = Silent Carriers in group 2
RHP2(L, t) = Remaining Healthy people in group 2 who are not infected yet

Figure 7: Group 2: The virus spread within the second group

Group 2 is designated as the workplace group. The virus spreads at a workplace due to the in-person interactions with a silent carrier's presence. The inputs to the group 2 come from silent carriers and healthy carriers from group 1 if the computations are in a horizontal block. The horizontal block means that the same silent carrier is interacting among the same people she interacted the day before. W is an intermediate variable whose value is the product of SC1 and N2.

In Fig. 7, the concept of lockdown is introduced. If the lockdown parameter (LKD2) is 0.6, it means that the lockdown was 60% adhered to. This lockdown, LKD2, is applicable only to the workplace group. Thus, if a company has work from home policy, and everyone follows it, the LKD2 can be set to 1, i.e., 100% lockdown. Also, there is a division in computations of Virus-infected Patients (VP) and Silent Carriers (SC) as VP21 and VP22, and SC21 and SC22. The virus spread is split into two categories. Category 1 indicates that the virus is spreading due to the Silent Carriers (SC). Category 2 means that the virus is spreading due to Healthy Carriers (HC). Thus, SC21 means silent carriers created in group 2 with category 1, and SC22 means that the silent carriers are created in group 2 with category 2.

Outputs of this group 2 are Virus-infected Patients (VP), Silent Carriers (SC), and Remaining Healthy people (RHP). They are used for further processing. This is explained in subsequent diagrams.

3.7 Virus Spread in Public Places

In Fig. 8, we describe the virus spread in public places.

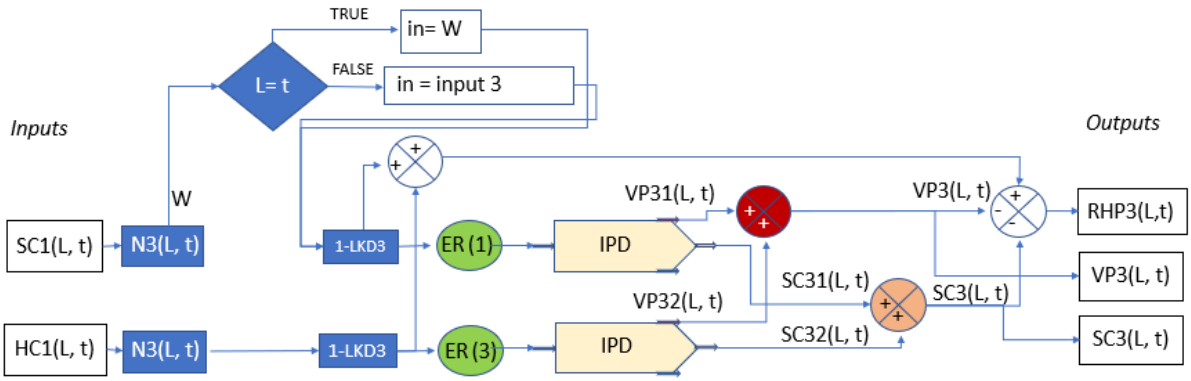

Acronyms:
The numeral 1 indicates group 1 related, and 3 indicates group 3 related.
SC1(L, t) = Silent Carriers in group 1
HC1(L, t) = Healthy Carriers who are carrying fomites
N3(L, t) = the number of people involved in the third group
LKD3 = fraction of the people adhering to the lockdown norms in third group
ER(1) = Exposure rate. The number 1 indicates the highest level of interaction with a silent carrier
ER(3) = Exposure rate. The number 3 indicates the low level of interaction with a silent carrier
IPD= Inter-Process Diagram
VP31 and VP32 are divisions of the total VP3. SC31 and SC32 are divisions of SC3. This is due to different inputs.
VP3(L, t) = Virus-infected Persons from group 3
SC3(L, t) = Silent Carriers in group 3
RHP3(L, t) = Remaining Healthy people in group 3 who are not infected yet

Figure 8: Group 3: The virus spread within the third group

The group3 is marked as the group of people one meets at public places. There are many commonalities between the virus spread diagram for group 2 and group 3. The main distinction is in the exposure rate used for healthy carriers spreading the virus. Since the group 3 is the interaction in public places, the duration and the level of contact is different. Thus, we have used ER (3) as the exposure rate. Outputs from group 3 are used in subsequent computations. W is an intermediate variable whose value is the product of SC1 and N3.

When the three groups are integrated, one gets combined equations, as shown below.

ER (2) > ER (3) due to the amount of time spent.

ER (2) is in an office environment. The number of people per square feet is going to be less than going on a train, bus, or a shopping center. Thus, ER (3) will change according to the type of place one meets.

Mathematical equations for VP, TSC, RHP when all the three groups are put together, is shown below.

$$VP(L, t) = (PE(L, t) * N1 * ER1 * IR) * \{1 + (1-LKD) * \{SCR * (N2+N3) * ER1 + HCR * N2*ER2+N3*ER3)\} \ldots\ldots (1)$$

$$TSC(L, t) = (PE(L, t) * N1*ER1 * SCR) * \{0 + (1-LKD) * \{SCR * (N2+N3) * ER1 + HCR * N2*ER2+N3*ER3)\} \ldots\ldots (2)$$

$$RHP1(L, t) = (PE(L, t) * N1) * \{1 - ER1*(IR + SCR)\} \ldots\ldots (3)$$

$$RHP2(L, t) = (PE(L, t) * N1*ER1*N2*(1-LKD)) * \{SCR*(1 - ER1*(IR + SCR)) + HCR* (1-ER2*(IR+SCR))\} \ldots\ldots (4)$$

$$RHP3(L, t) = (PE(L, t) * N1*ER1*N3*(1-LKD)) * \{SCR*(1 - ER1*(IR + SCR)) + HCR* (1-ER3*(IR+SCR))\} \ldots\ldots (5)$$

These equations get a bit more complex once a probability distribution functions are applied on VP (L, t) and TSC (L, t). How to apply a probability distribution function is outlined next.

3.8 Simulating the Incubation Period by a PDF

Any person infected by the SARS-CoV-2 virus does not show symptoms immediately. In the computational block, CB, shown in Fig. 4, we have shown VP (L, t) as one of the outputs. However, all virus-infected persons do not show up in one day. Thus, we have used a probability distribution function PDF(T) that operates on VP (L, t). The PDF is designed in such a way that most of the patients come out on the 5th, 6th, and 7th. This makes it possible to simulate the slow release of patients as and when their symptoms show up. In Fig. 9, we depict the effect of applying a PDF on VP (L, t).

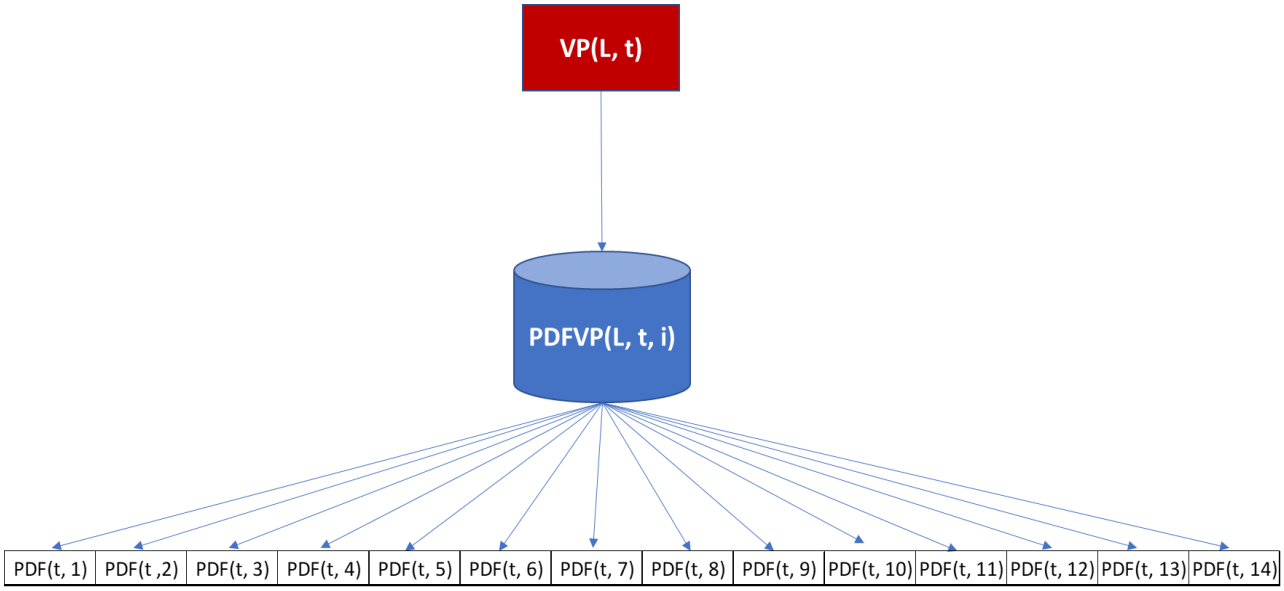

Figure 9: Operating VP (L, t) by PDF (L, t, i)

The concept of the incubation period is not only applicable to people identified to become virus-infected persons, but it is applicable to silent carriers as well. A person exposed to the virus may exhibit high activity at any time between 2 to 14 days. It is observed that high activity is around day 5 to 7. Using this observation, we designed another PDF for silent carriers.

$$\mathrm{SHVP}(t) = \sum_{i=1}^{\{(t-i)>0\,||(i=14)\}} (HVP(\mathrm{t}-\mathrm{i}, \mathrm{t}-1))$$

Acronyms:

CVP = Cumulative Virus-infected patients
PDF = Probability Distribution Function
CPDFVP = Cumulative PDF Virus infected Patients. This is the total of patients coming out of incubation period and showing symptoms.
HVP = Hidden Virus infected Patients. These patients are still under incubation period and behave like a silent carrier.
SHVP = Sum of all Hidden Virus infected Patients.

Figure 10: Distribution of Hidden Virus-infected Persons using a PDF

The sum of total virus patients from each group of Computational Block is called as Cumulative Virus Patients (CVP). Each Computational Block gives us a different CVP count. The SARS-CoV-2 virus has an incubation period of 14 days. Thus, even if 10 patients are infected in one day, each one would show symptoms at a different time within the incubation period. This is mathematically represented by applying a Probability Distribution Function (PDF) on the internal count of virus-infected patients (VP). After we distribute the CVPs through PDF, we get the total number of virus patients at time t and level L. This total

number of virus patients, is called the Cumulative of PDF output as a Virus-infected patient. (CPDFVP).

When a healthy person is considered inside the Internal Processing Diagram, some people are marked as the ones who are going to be Virus-infected Patients. We repeat that these individuals are only marked internally. They have the infection, and they are silent carriers. When the incubation period is over, they start showing symptoms and go to a hospital. However, until they come out as Virus-infected Patients, they are not known as patients, or they are hidden. These patients who are not yet showing symptoms are the Hidden virus patients (HVP). HVPs for a certain Computational Block (CB) can be found out by subtracting Cumulative PDF output of Virus-infected Patients CPDFVP (L, t, i) from the Cumulative Virus-infected patients, CVP (L, t) of that Computational Block (CB). The first block of every new level gets HVP as one of its inputs. Since the incubation period is 14 days, we give the Hidden virus patients (HVP) as input only for the last 14 levels. For example, a new Computational Block (CB) with time 16 and level 16, will get HVPs from CBs at time 15 and levels 2 to 15. The sum of 14 latest HVPs is called Sum of Hidden Virus Patients (SHVP) as in equation 6

$$\mathrm{SHVP}(t) = \sum_{i=1}^{\{(t-\mathrm{i})>0\,||(\,\mathrm{i}=14)\}\}} (HVP(\mathrm{t}-\mathrm{i},\mathrm{t}-1)\,) \qquad \text{..... (6)}$$

$$\mathrm{CVP(L,T)} = \sum_{t=1}^{T} VP(L,t) \qquad \text{..... (7)}$$

$$\mathrm{CPDFVP(L,T)} = \sum_{t=1}^{T} PDFVP(L,t) \qquad \text{..... (8)}$$

$$\mathrm{HVP\ (L,\ T) = CVP\ (L,\ T) - CPDFVP\ (L,\ T)} \qquad \text{..... (9)}$$

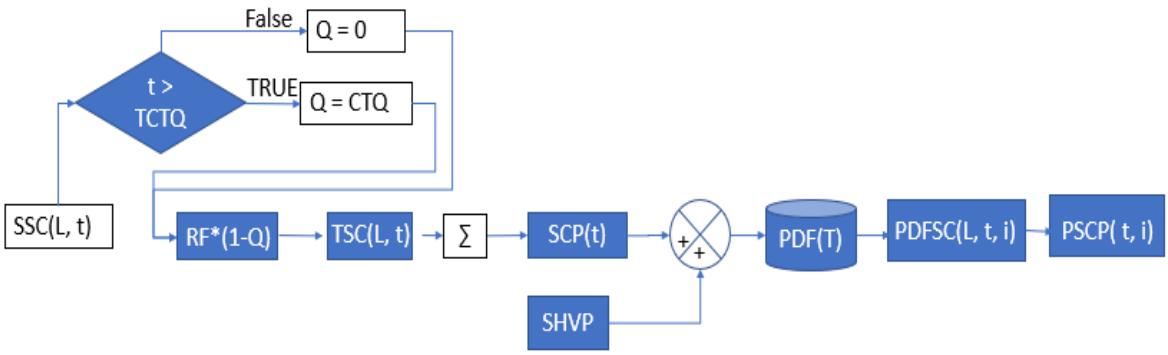

$$SCP(t) = \sum_{i=1}^{\{(t-\mathrm{i})>0\,||(\,\mathrm{i}=14)\}\}} (\mathrm{TSC}(\mathrm{t}-\mathrm{i},\mathrm{t}-1)\,)$$

Acronyms:

SSC = Sum of Silent Carriers
CTQ = Contact Tracing and Quarantining
TCTQ = Time at which Contact Tracing and Quarantining is enforced
RF = Reduction Factor
TSC = Total Silent Carriers after applying the RF and CTQ
SCP = Silent Carriers at Present for starting their own virus spread network
SHVP = Sum of Hidden Virus infected Patients who act as silent carriers
PDF = Probability Distribution Function
PDFSC = Silent Carriers who have come out of the PDF
PSCP = Probability based Silent Carriers ready to Proliferate on the next day

Figure 11: Distribution of Silent Carriers using a PDF

The silent carriers of group 2 and group 3 of CB are together called as Sum of Silent Carriers (SSC). Silent Carriers (SCs) are multiplied by a reduction factor (RF) because out of all the silent carriers, 10% are likely to spread the infection. Further, if we consider the case of family quarantine, we also multiply SSC by the quarantine factor (1-Q), where is Q is the Quarantine flag. The quarantine flag is 0 if there is no quarantine. If the quarantine policy is applied, then the quarantine flag is equal to the Contact Tracing and Quarantine value (CTQ). Thus, we get Total Silent Carriers (TSC) when we apply reduction factor (RF) and 1-Q to Sum of Silent Carriers (SSC). The first block of every new level gets TSC as one of its inputs. But we only give the TSCs of the last 14 levels as input. For example, a new CB with time 17 and level 17 will get TSCs from CBs at time 16 and levels 3 to 16. The sum of 14 latest TSCs is called Silent Carrier at Present (SCP). The formula is given by:

$$SCP(t) = \sum_{i=1}^{\{(t-\mathrm{i}) > 0 \,||(\,\mathrm{i}\,=14)\}\}} (TSC(\mathrm{t}-\mathrm{i}, \mathrm{t}-1) \text{ .....(10)}$$

Where
SCP = Silent Carrier Population,
t-i = Level of computation at time t,
TSC = New or incremental Silent cases,
t = Current day count,
The summation should be carried out until $\{(t-\mathrm{i}) > 0 \,||(\,\mathrm{i}\,=14)\}\}$

As all Sum of Hidden Virus-infected Patient (SHVPs) and Silent Carrier at Present (SCPs) do not start infecting people at the same time, we distribute them over 14 days using a Probability Distribution Function (PDF), as shown in figure PDF Graph. The distributed SHVP and SCP are together called as Probability Distribution based silent carriers and hidden virus patients (PDFSC). At every new level, we take the total Sum of Hidden Virus-infected Patient (SHVP) and Silent Carrier at Present (SCP) that are active at that time and together call them PSCP.

As shown in Fig. 11, this PSCP, along with external silent carriers (SCE), form the People Infected (PI), which serves as the input for the first block of every level. For the further

blocks of a level, we first check if a patient has already been detected and if family quarantine is implemented. If that is the case, then our input is cut off, and that level will not execute further. But if a virus patient is detected but family quarantine is not implemented, or vice-versa, we give the 3 inputs to CB as RHP1, RHP2, RHP3 from the previous blocks.

In the next figure, Fig. 12, input calculations are described. The cycle of virus spread continues from one day to the next. The computational block shown in Fig. 4 represents the simulation of a single day. The next day, a new iteration starts, and new calculations are made. In terms of the virus spread, this means that the next day virus continues to spread. The spread during the next day depends on the count at the end of the previous day. Virus growth is a self-propelling system.

Since we are building a self-propelling system, it has to have internal inputs that keep feeding back on the next day. In Fig. 12, we show how these new inputs are calculated based on the old outputs.

3.9 Inputs for the Next Cycle

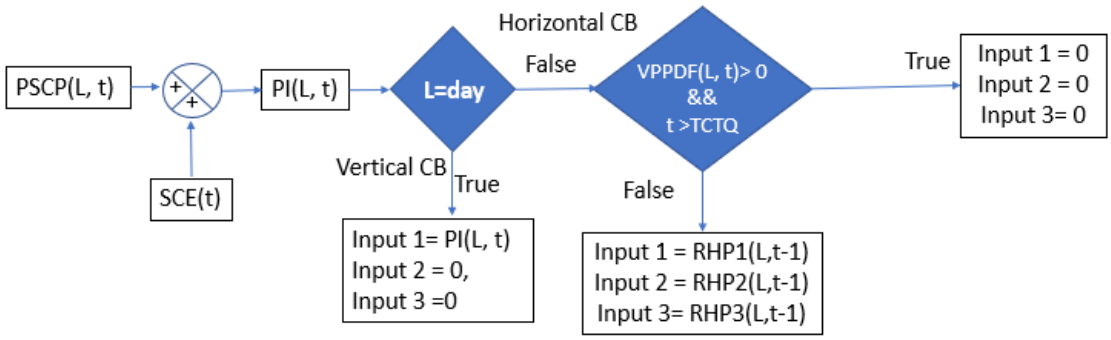

Acronyms:

PSCP = Probability based Silent Carriers ready to Proliferate on the next day
SCE = Silent Carriers coming from External world
PI = People Infected and presently carriers
VPPDF = Virus infected Patients coming out of PDF
TCTQ = Start Time of Contact Tracing and Quarantining
RHP1, RHP2, RHP3 = Remaining Healthy people from groups 1, 2, and 3 respectively. They have remained healthy in the last cycle of iteration.

Figure 12: Input calculations for the next iteration

Before we go to the block diagram in Fig. 10, we explain the rationale behind it. Consider the scenario of contact tracing and quarantining. Let's consider that in a family, one person is identified as a COVID-19 patient. Since this patient has had very close contact with family members, the chances are high that the family could be infected. Often testing family members once does not give the correct results due to the incubation period of the virus and not knowing when the infection would show up. One way to curtail the spread of the

virus is to isolate the entire family and home, quarantine them for 14 days. If this family quarantining is implemented in 70% of the cases, then the CTQ is 0.7. The day from when such a policy is implemented is TCTQ, i.e., Start Time of Contact Tracing and Quarantining. The condition in the left decision block in Fig. 8 states that if a patient is found and if today the family quarantine policy is on, then do not send any members to the next horizontal block. As explained earlier, computations in every horizontal block mean interactions among the same members as on the previous day. The only difference is those who have been identified as Virus-infected patients, and those who have been quarantined will no longer be present to interact with others. When family quarantine policy is enforced, all members of the family, that is, the entire group 1, are isolated from the rest of the people. Thus, the number of members passed to the next computational block in group 1 are zero under quarantine enforcement. We have also considered one member of group1 who goes to the workplace and then mixes in public places as being group 2 and group 3, respectively. Since that one member is no longer interacting with people, the input 2 to group 2 is zero, and so is the input 3. However, in the absence of the family quarantine policy, input 1 is RHP1, the remaining family members who are not yet infected. The input 2 is the same as RHP2, the remaining healthy people in group2, and the input 3 is RHP3.

3.10 Separation of Active, Recovered, and Deceased Cases

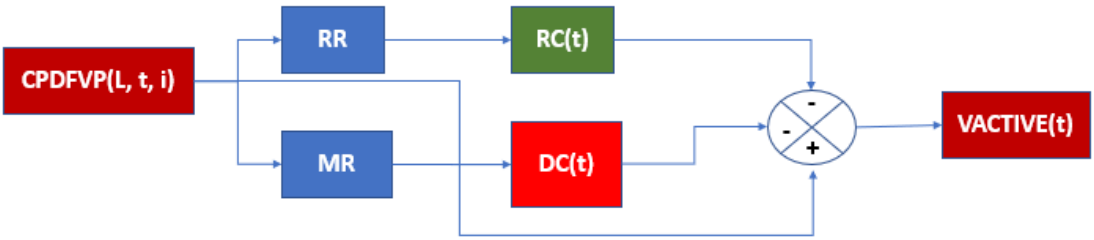

CPDFVP(L, t, i) is an array of cumulative Virus infected Persons after they come out of Probability Distribution Function. This is the total of virus patient cases counted after they show symptoms.
RR is the Recovery Rate
MR is the Mortality Rate
RC(t) is the cumulative number of Recovered Cases at time t
DC(t) is the cumulative Deceased Cases at time t
VACTIVE(t) is the cumulative number of Active Cases at time t

Figure 13: Computation of the active cases

This CPDFVP, i.e., the cumulative Virus-infected Persons, are often recovered, or it might result in their death. Out of this CPDFVP, it is observed from the available data that the RR percentage of people gets cured while MR percentage of people are deceased. Remaining virus patients are hospitalized, and their cases are in the active state. Thus, from figure 13,

MR and RR percentage of CPDFVP results in Deceased Cases (DC) and Recovered Cases (RC). Active Cases are said to be the difference between the sum of DC and RC and CPDFVP.

4. Experimental Protocol

4.1 Parameter Value Selection and Basis

In this study, we have developed a model to study the number of cases of COVID-19. The total system diagram involves multiple parameters. We have derived some parameters based on actual data available on the COVID19India.org website, while values of other parameters are taken from literature. In some cases, we had to use the best judgment to ensure that the values are likely to occur in real life. The following is a list of assumptions.

1. It is assumed that infected people remain in the cycle for 14 days. They are considered as either recovered or deceased. The incubation period for COVID-19 is considered to be 14 days. As per the CDC guidelines, 14 days should be the period of quarantine (Science Daily website). The peak activity is between 5 to 7 days. This is as per the median of the study reported by the Science daily. Similar numbers are reported in various references.
2. The data used for training the model was from March 1, 2020, up to May 3, 2020
3. All workplaces, except for essential services, are closed during the lockdown in India. People are allowed to go within walking distance to buy groceries and medicines. This lockdown started from March 25, 2020; however, slowly, people started abiding by it. Thus, we have gradually changed the value of the lockdown percentage.
4. The Infection Rate (IR) was calculated using the data from COVID19India (India data,2020). Extensive contact tracing was done in India. All data related to the traced contact is also part of the dataset. Thus, one can find out how many people were infected by one individual. Using Del Valle's study [10], we know that, on average, a person meets 22 people. By taking the ratio of people infected to the number of people met, one gets IR. The calculated value of IR is 0.12. We have adjusted it to 0.105 during the data training stage.
5. The value of IR reported in Germany is 28% and, in the US, it is 34% [26]
6. The number of people in each of the 3 groups are selected as follows. In general, it is reasonable to assume that a family consists of 4 people. At the workplace, one meets a limited number of people compared to in public places. As per Del Valle [10] one meets 22 people every day. With that total in mind, we select 8 people at the workplace, and 10 people in public places. Although these numbers may vary in individual cases, on average, it appears to be a reasonable distribution.
7. For selecting the exposure rate, we calculated the actual exposure rate among Italian doctors. In a survey, (8), Italian doctors reported that 108 out of 272 had symptoms of COVID-19. Out of the 272 GPs, only 125 had direct contact with a confirmed COVID-19 patient. The ratio of those who had symptoms to those who were exposed is 0.864. Since ER (1) indicates the highest level of exposure, we can choose a number close to 0.78.

8. The ER (2) is the medium level exposure rate. It is selected as 0.5. The ER (3) is the lowest exposure and is selected as 0.2.
9. The Silent Carrier Rate (SCR) is considered as 0.5. The Healthy Carrier Rate (HCR) is taken 0.2 since the possibility of fomite transmitted infection is low. The lockdown values were based on the news reports combined with a gut feeling. The lockdown dates and the change of conditions are mostly based on the news.
10. We consider 80% silent carriers, 15% hospitalized, and 5% needing ICU care. This is based on the study by Wu and Mc Googan [40]. This report is based on over 44000 cases studied. They found 81% of cases mild, 14% severe, and 5% critical. As per the WHO Q&A session [37] on March 17, 2020, "For COVID-19, data to date suggest that 80% of infections are mild or asymptomatic, 15% are severe infection, requiring oxygen, and 5% are critical infections, requiring ventilation. "
11. The fatality rate is estimated to be in range 2 to 3% by Tanu Singhal [29].
12. Asymptomatic patients can transmit the virus, yet they continue to show negative on the SARS-CoV-2 test. [15]
13. We conducted several simulations to get the best fit for the India data. Every parameter was adjusted carefully by keeping the values within the practical limits to ensure that the best-fit parameters are not merely a numerical play, but represent reality as closely as possible.
14. There are different opinions about the role of asymptomatic patients in the spread of SARS-CoV-2. The initial thought process was that asymptomatic patients do not spread the virus. However, now there is evidence that asymptomatic people can infect others (Bai et al., [2]) (Hu et al. [13]). Since there is still no concurrence on the percentages, we consider that the virus transmission from symptomatic patients is 20%. We have also considered that asymptomatic patients are 50% of all the patients. Thus, 20% of 50% gives 10% of the total. This is the reduction factor (RF).

Table A shows all the parameters for India data.

Parameter	Value	Parameter	Value
N1	4	First lockdown (LKD 2, LKD 3)	0.15
N2	10	Second lockdown (LKD 2, LKD 3)	0.60
N3	8	Third lockdown (LKD 2, LKD 3)	0.68
ER1	0.78	Fourth lockdown (LKD 2, LKD 3)	0.83
ER2	0.5	First Lockdown Start Date	03/11/2020
ER3	0.2	Second Lockdown Start Date	03/23/2020
IR	0.105	Third Lockdown Start Date	31/03/2020
SCR	0.5	Fourth Lockdown Start Date	04/07/2020
HCR	0.12	RF	0.1

4.2 PDF for Simulating the Incubation Period

The probability distribution functions are used on virus patients as well as the silent carriers. These distributions simulate the effect of the incubation period. We have considered that the silent carriers take less time compared to the virus-infected patients for coming out of the incubation period. This was selected during the training phase to give the best fit to the data.

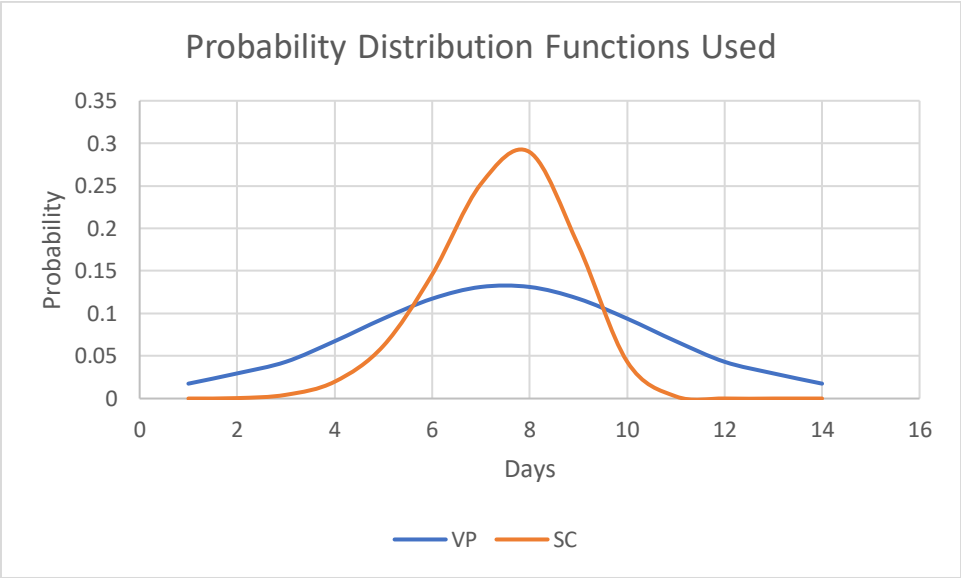

Fig. 14: PDF applied to Virus-infected Patients (VP), and Silent Carriers (SC)

4.3 Mortality Rate Calculations

1. Mortality Rate in hospital admitted patients

Mortality in hospital admitted patients could be calculated as the ratio of the number of deaths and the number of people admitted as in equation [11]. It is also known that the number of people admitted to the hospital is patients with severe and critical symptoms. According to WHO [38], 13.7% of patients have severe symptoms, while 4.7% are critical. Thus, the number of people admitted to the hospital are 18.5% of the total daily patient count. The mortality rate of hospital admitted patients for COVID-19 India using MIMANSA is

$$\mathrm{MR}_{admitted} = \frac{\text{Number of deaths}}{\text{Number of people admitted}} \qquad \text{..... (11)}$$

2. Mortality Rate in tested patients

Mortality in tested patients can be calculated as the ratio of the number of deaths and the number of people tested. A minimum number of people tested is the number of people confirmed daily. Thus, the Mortality rate is given as in equation [12]

$$\mathrm{MR}_{tested} = \frac{\text{Number of deaths}}{\text{Number of people tested}} \qquad \text{..... (12)}$$

3. Mortality Rate in ventilated patients

Mortality in ventilated patients can be calculated as the ratio of the number of deaths and the number of people on the ventilator as in equation [13]. Also, as discussed above, the number of people in critical condition is 4.7%. Therefore, the number of patients on a ventilator can be considered as the number of critical patients.

$$\mathrm{MR}_{tested} = \frac{\text{Number of deaths}}{\text{Number of patients on a ventilator}} \qquad \text{..... (13)}$$

Mortality Rate for COVID-19 India data is calculated using the equations [11], [12], [13]. The daily prediction for confirmed, as well as deceased cases, are made using MIMANSA. The number of patients admitted and on a ventilator is calculated as discussed above. Using these equations [11], [12], [13] we get $\mathrm{MR}_{\mathrm{admittted}}$ = 17.4%, $\mathrm{MR}_{\mathrm{tested}}$ = 3.2% and $\mathrm{MR}_{\mathrm{ventilated}}$ = 68%.

5. Results and Analysis

The following results and discussion are about the COVID-19 cases in India. The actual data was obtained from the COVID19India.org website.

We optimized some parameters to get the desired results. The trained model was further tested using the test data set kept aside from the primary dataset. The model validation continued for 6 days to ensure correct predictions within the acceptable error band.

In this model, we are considering India data from March 1, 2020. Therefore, in the following graphs, t=1 indicates March 1, 2020. The FIg. 15 shows that the MIMANSA values match reasonably well to the actual data.

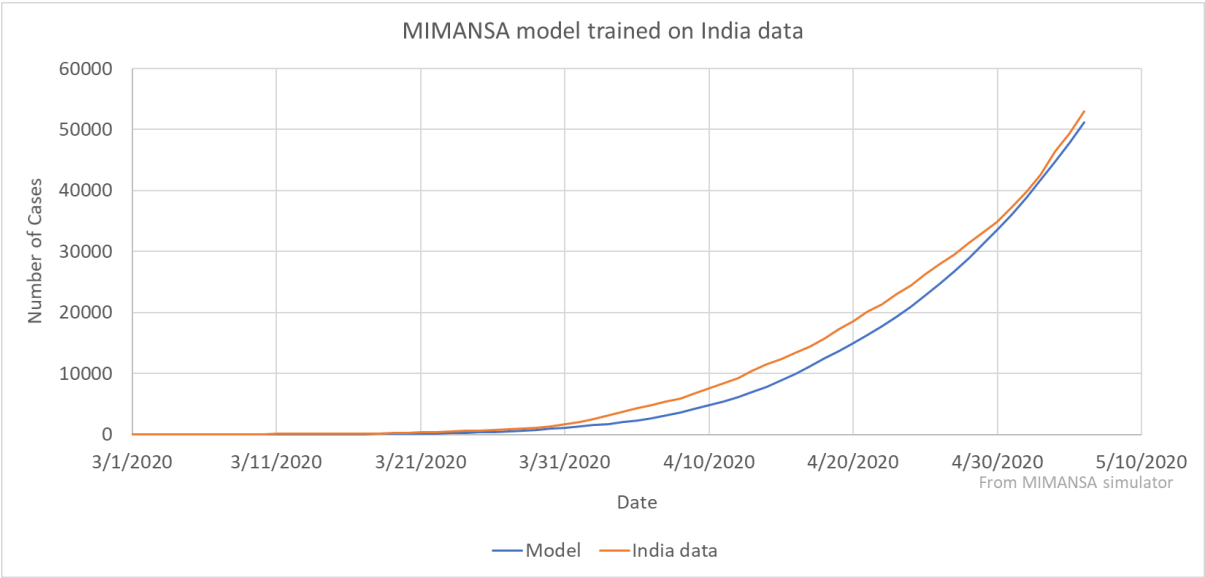

Fig. 15: A graph showing MIMANSA training values compared with the actual patient cases in India

The graph below shows the effect of different values for lockdown parameters. The different values considered are 75%, 83%, and 90%. Till day 64, that is, May 3, the number of COVID-19 patients in India were 42,546. MIMANSA shows it as 41,662. If the lockdown was not as strict as it currently is, that is, if we consider lockdown value to be 75%, the number of patients in India would have been 56,267. Similarly, if the lockdown were to be as high as 90%, then the patients would have been 31,386 as of May 3, 2020. The graph below shows the effect of various lockdown values on the number of patients. It also shows that the lockdown value of 83% gives the values closest to the actual data.

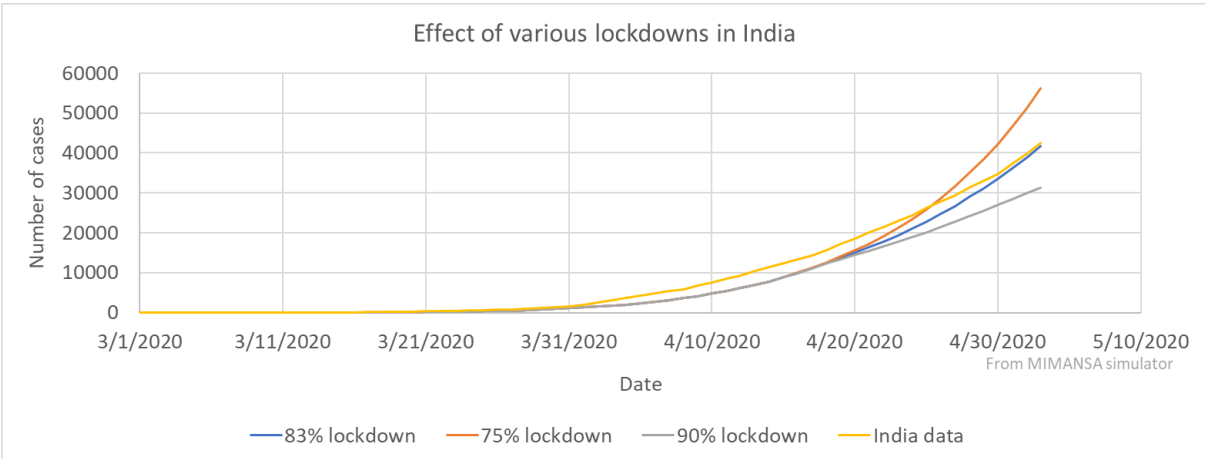

Fig. 16: Lockdown strictness compared with the actual patient cases in India

Another analysis is to check the effect of no lockdown in India. The graph below compares current India data with the impact of no lockdown. With no lockdown imposed in India, the number of COVID-19 patients would have reached incredible numbers by April 20.

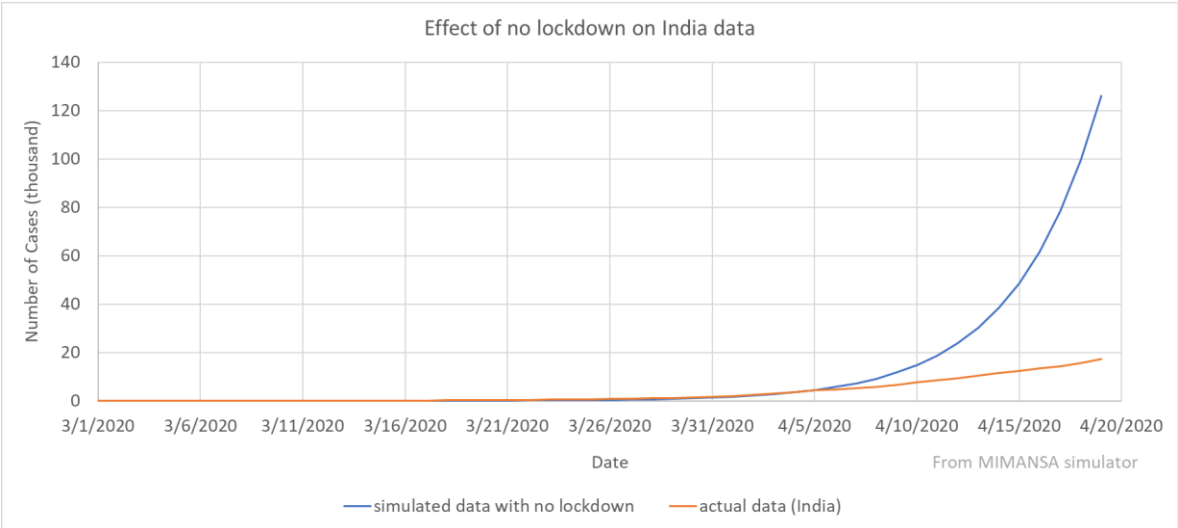

Fig. 17: A graph showing MIMANSA training values compared with the actual patient cases in India

The below graph shows predictions for India till June 15, 2020.

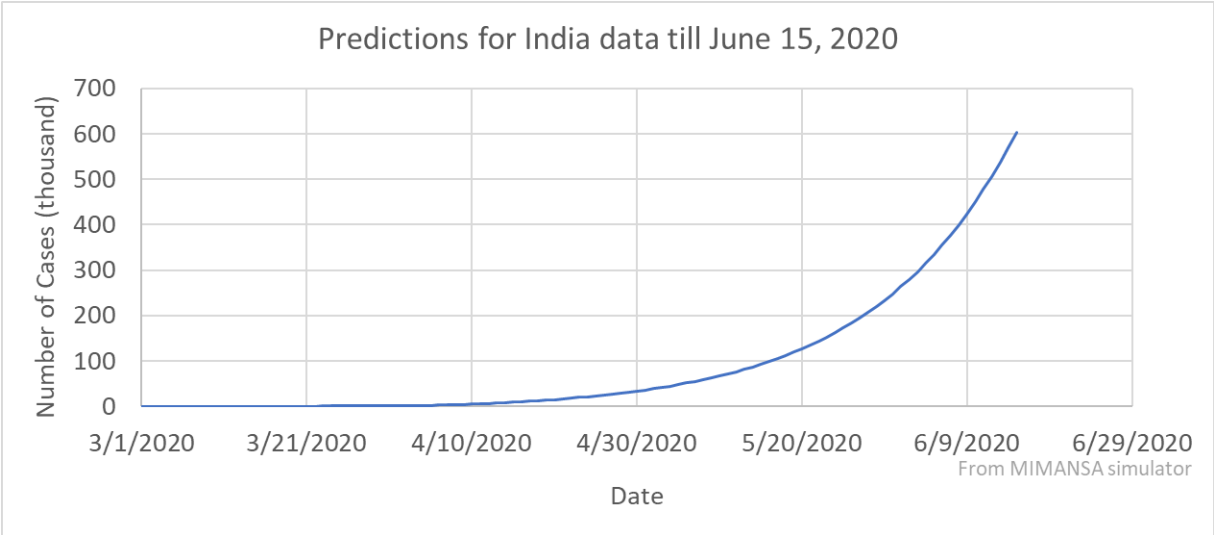

Fig. 18: MIMANSA projections for India for an additional 30 days.

6. Discussion

MIMANSA is a unique model that makes effective use of the systems approach to simulate the SARS-CoV-2 spread. While building the model, every step was based on observations. These observations represent the true picture of how the virus spread takes place.

To represent reality, we started with only one silent carrier, P, who interacts with others. We grouped these interactions into family, workplace, and public places. There is no inter-

group interaction of any member other than P in one computational block. Further, the model is built in such a way that every individual interacts with 22 people, and the virus is spread during these interactions.

While one gets in contact with a silent carrier, it does not necessarily mean that everyone will catch the virus the same day and get infected. The possibility of infection depends on several factors such as the distance between the infected person during the interaction, contacting the droplets infected with the virus, touching fomites, rubbing eyes, nose, and mouth with infected hands, individual's immunity, co-morbidity, age, and the hours of exposure. All these facts are a part of MIMANSA.

MIMANSA uses multiple parameters as inputs. It is based on the current understanding of the disease. This understanding will certainly improve as time goes by. Once understanding improves, the parameters will have to be changed. The model can predict for any number of days as one wishes. However, with the possibility of a new vaccine, herd immunity, and antibody tests, the parameters will need to be recalculated. Thus, in all the simulations shown under the Results section, we have made predictions for additional 30 days.

The two main parameters that control the count of the number of cases are the exposure rate and the infection rate. In section 3, equation(1) also shows that the prominent terms that could increase the virus-infected patients (VP) are the exposure rate, and the infection rate. Both these parameters are explained in detail below.

The exposure rate is a measure of how much a person gets exposed to a virus when in contact with a silent carrier. It is a function of multiple factors. The exposure depends on the duration of the meeting, the number of contacts, the virus activity level at the time of the contact, mask usage, social distancing, hand washing, etc.

Exposure depends on what level of precautions individuals take. People wearing a mask, keeping the prescribed social distance, and washing hands frequently will undoubtedly reduce the exposure level. The individual exposure risk goes down when one follows the recommended practices. The overall exposure levels go down for the community if the community follows the recommended practices. It is certainly possible that most people will follow these basic rules. Thus, even if one comes in contact with a carrier, the exposure rate ER (1) will be less for those who follow the rules compared to the people who do not follow the rules.

In general, the infection rate depends on the immunity of the exposed person, the virus count, the air volume surrounding the two, etc. Immunity certainly plays a major role in the infection rate.

There are two types of antibodies. One is called the immunoglobulin M (IgM), and the other is called the immunoglobulin G (IgG). The IgM is for short-term defense while the IgG is for long-term protection. The IgG is retained for a long time, and when the IgG antibodies are found, it builds immunity. As of May 12, 2020, scientists are busy developing antibody tests. Once approved and widely used, we will get data on it. The additional factors that would change the immunity would be the herd immunity and vaccine availability. The availability of the COVID-19 antibody tests will also ease out the current pressures of this pandemic.

In the future, more work needs to be done on reducing the exposure rate and the infection rate. More data will be made available as and when doctors and scientists conduct tests. The new data will help us to account for immunity as an impact factor in MIMANSA.

MIMANSA is a self-driven model. As a starting point, MIMANSA needs to know the presence of silent carriers. The simulator starts with the number of silent carriers as its input. Once started, it will continue to build the virus spread network as more and more people come in contact with the initial silent carriers. In this process, it creates more and more silent carriers. These newly created silent carriers have their contacts or network. They mix with people in the other networks, and it fuels the growth of the virus. The only way to stop this cycle is to break the link in more than one way. It would involve multiple methods from isolating potential silent carriers, or reducing the exposure by social distancing, or using a mask, or washing hands frequently and touching eyes, mouth, and nose, or self-imposed isolation from others.

One of the biggest strengths of MIMANSA is that it represents the observed reality. The model is flexible and easy to modify when new observations are known and when discoveries take place. It uses the exposure rate and the infection rate as the main driving factors. The understanding will continue to improve in the real world, and it can be quickly updated in MIMANSA.

MIMANSA is not a COVID=19 specific model. It is a generic model that simulates the virus spread. To adapt MIMANSA to another virus, one has to change the exposure rates, the applied PDFs, the incubation period, the infection rate, and perhaps some assumptions to reflect the characteristics of a new virus.

MIMANSA helps one simulate scenarios to study the impact of many different conditions. It assists public health officials in complex decision making, enables scientists in projecting the SARS-CoV-2 virus spread, and aids hospital administrators in the management of COVID-19 patients better.

7. Conclusion

In this paper, we have given a detailed description of how a multilevel integrated model for the spread of COVID-19 is built using a systems approach. We designed the system by keeping the real world view in perspective at all times.

Daily in-person interactions were split into three layers, namely family, workplace, and public places. These interactions form the basis of person-to-person virus transmission. Every day was built as a computational block connected to other layers through the silent carriers coming out of the block. Each day comprises of many layers of computation blocks.

A complex network of the virus spread was built block-by-block and layer-by-layer. The multiple layers were integrated to give a complete system view. All parameters have physical significance in the real world.

The MIMANSA simulator has four controls. They are the virus exposure control, the infection rate control, the lockdown control, and the quarantine control. Besides these, there is complete flexibility in changing other parameters, if there is empirical evidence.

In this paper, we have shown the models' effectiveness in simulating COVID-19. However, MIMANSA is an inherently generic model to simulate the virus spread. It is flexible and can be easily adapted to other spread of viruses.

MIMANSA was trained using COIVD-19 case data from India. Once trained, it has been able to track the number of patient cases within 5% error margin. However, the objective of MIMNASA is not only predicting the cases but to help make complex decisions with ease.

MIMANSA allows one to simulate various percentages of lockdown, assess the effectiveness of masks usage, contact tracing, and quarantine. One can run multiple scenarios with varying levels of each of the parameters to find out a trade-off between a high number of patients with a minimal impact on the economy vs. a low number of cases with a high impact on the economy. With the help of MIMANSA, our current research aims at finding the balance between the effect of strict lockdown on the economy vs. the marginally high number of COVID-19 patients with a bit relaxed lockdown.

8. Acknowledgments

We thank Dr. Abhishek Karwa, Asst. Professor of Medicine, School of Medicine, University of Califonia San Fransisco, California, for meticulously going through multiple drafts of the paper and making valuable suggestions. His inputs have been instrumental in shaping this paper.

9. References

1) Adam J Kucharski, Timothy W Russell, CharlieDiamond, YangLiu, JohnEdmunds, SebastianFunk, Rosalind MEggo, 'Early dynamics of transmission and control of COVID-19: a mathematical modelling study', The Lancet Infectious Diseases, Volume 20, Issue 5, May 2020, Pages 553-558.
2) Bai, Yan, Lingsheng Yao, Tao Wei, Fei Tian, Dong-Yan Jin, Lijuan Chen, and Meiyun Wang. "Presumed asymptomatic carrier transmission of COVID-19." *Jama,* 323, no. 14 (2020): 1406-1407.
3) Bertalanffy, Ludwig von. "General Systems Theory as Integrating Factor in Contemporary Science." *Akten des XIV. Internationalen Kongresses für Philosophie* 2 (1968): 335-340.
4) Cakir Z, Savas HB. A Mathematical Modelling Approach in the Spread of the Novel 2019 Coronavirus SARS-CoV-2 (COVID-19) Pandemic. Electron J Gen Med. 2020;17(4): em205. https://doi.org/10.29333/ejgm/7861
5) CDC website, https://www.cdc.gov/coronavirus/2019-ncov/
6) Chen Wei, Wang Qing, Li Yuanqiu, Yu Hailiang, Xia Yinyin, Zhang Muli, Qin Ying, Zhang Ting, Peng Zhibin, Zhang Ruochen, Yang Xiaokun, Yin Wenwu, An Zhijie, Wu Dan, Yin Zundong, Li Shu, Chen Qiulan, Feng Luzhao, Li Zhongjie, Feng Zijian, "Early containment strategies and core measures for prevention and control of novel coronavirus pneumonia in China," Chin J Prev Med, 2020,54: Epub ahead of print. DOI: 10.3760/cma.j.issn.0253-9624.2020.03.003
7) CEBM website, https://www.cebm.net/covid-19/covid-19-what-proportion-are-asymptomatic/
8) Cidrap website, https://www.cidrap.umn.edu/news-perspective/2020/04/researchers-report-21-covid-19-co-infection-rate
9) Deb, Soudeep, and Manidipa Majumdar. "A time series method to analyze incidence pattern and estimate reproduction number of COVID-19." *arXiv preprint arXiv:2003.10655* (2020).
10) Del Valle, Sara Y., James M. Hyman, Herbert W. Hethcote, and Stephen G. Eubank. "Mixing patterns between age groups in social networks." Social Networks 29, no. 4 (2007): 539-554.
11) Duccio Fanelli, Francesco Piazza, 'Analysis and forecast of COVID-19 spreading in China, Italy and France',
12) Edwards CH, Penney DE. Differential Equations and Boundary Value Problems: Computing and Modeling. Pearson Prentice Hall, 2008
13) Hu, Zhiliang, Ci Song, Chuanjun Xu, Guangfu Jin, Yaling Chen, Xin Xu, Hongxia Ma, et al. "Clinical characteristics of 24 asymptomatic infections with COVID-19 screened among close contacts in Nanjing, China." *Science China Life Sciences* (2020): 1-6.
14) India data website, https://www.covid19india.org/
15) JAMA network website, https://jamanetwork.com/journals/jama/article-abstract/2762028

16) Jia L, K Li, Y Jiang, X Guo, 'Prediction and analysis of Coronavirus Disease 2019', arXiv preprint arXiv:2003.05447, 2020
17) Kaihao Liang, 'Mathematical model of infection kinetics and its analysis for COVID-19, SARS, and MERS', Infection, Genetics and Evolution, Volume 82, August 2020, 104306
18) Klinkenberg D, Fraser C, Heesterbeek H. The effectiveness of contact tracing in emerging epidemics. PLoS One 2006; 1: e12.
19) Lai, Chih-Cheng, Tzu-Ping Shih, Wen-Chien Ko, Hung-Jen Tang, and Po-Ren Hsueh. "Severe acute respiratory syndrome coronavirus 2 (SARS-CoV-2) and corona virus disease-2019 (COVID-19): the epidemic and the challenges." *International journal of antimicrobial agents* (2020): 105924.
20) Lauer SA, Grantz KH, Bi Q, Jones FK, Zheng Q, Meredith HR, Azman AS, Reich NG, Lessler J , 'The Incubation Period of Coronavirus Disease 2019 (COVID-19) From Publicly Reported Confirmed Cases: Estimation and Application', Ann Intern Med. 2020
21) Mandal S, Bhatnagar T, Arinaminpathy N, Agarwal A, Chowdhury A, Murhekar M, Gangakhedkar RR, Sarkar S. Prudent public health intervention strategies to control the coronavirus disease 2019 transmission in India: A mathematical model-based approach. Indian J Med Res 2020;151:190-9
22) Nicholas C. Grassly and Christophe Fraser, 'Mathematical models of infectious disease transmission,' Nature Reviews, Microbiology volume 6, June 2008, pp. 477-487
23) NIH Website https://www.nih.gov/news-events/news-releases/new-coronavirus-stable-hours-surfaces
24) Parodi S., Liu Vincent, 'From Containment to Mitigation of COVID-19 in the US', JAMA, April 21, 2020 Volume 323, Number 15, pp. 1441-1442
25) Rothan, Hussin A., and Siddappa N. Byrareddy. "The epidemiology and pathogenesis of coronavirus disease (COVID-19) outbreak." Journal of autoimmunity (2020): 102433
26) Schmitt, Franz-Josef. "A simplified model for expected development of the SARS-CoV-2 (Corona) spread in Germany and US after social distancing." *arXiv preprint arXiv:2003.10891* (2020).
27) Science Alert website, https://www.sciencealert.com/here-s-what-we-know-so-far-about-those-who-can-pass-corona-without-symptoms
28) Science Daily website, https://www.sciencedaily.com/releases/2020/03/200310164744.htm
29) Singhal, T. A Review of Coronavirus Disease-2019 (COVID-19). Indian J Pediatr 87, 281–286 (2020). https://doi.org/10.1007/s12098-020-03263-6
30) Vaidya, Vinay G., and Frank J. Alexandro Jr. "Evaluation of some mathematical models for tumor growth." *International journal of bio-medical computing* 13, no. 1 (1982): 19-35.
31) Vaidya, Vinay G., Frank J. Alexandro Jr, and P. G. Vaidya. "A bilinear control model for tumor growth and chemotherapy." *International journal of bio-medical computing* 17, no. 2 (1985): 145-154.

32) Vaidya, P. G., V. G. Vaidya, and D. G. Martin. "An application of the non-linear bifurcation theory to tumor growth modeling." *International journal of bio-medical computing* 27, no. 1 (1991): 27-46.
33) Villalobos Arias, Mario Alberto, 'Using generalized logistics regression to forecast population infected by Covid-19', arXiv:2004.02406 vI [q-bio.PE], April 6. 2020
34) Von Bertalanffy, Ludwig. "General Systems Theory." *The Science of Synthesis: Exploring the Social Implications of General Systems Theory* (2010): 103.
35) Wang, Wenbao and Chen, Yiqin and Wang, Qi and Cai, Ping and He, Ye and Hu, Shanwen and Wu, Yan and Wenxiang, Wang, The Transmission Dynamics of SARS-COV-2 in China: Modeling Study and the Impact of Public Health Interventions (3/7/2020). Available at SSRN: https://ssrn.com/abstract=3551319 or http://dx.doi.org/10.2139/ssrn.3551319
36) Website UpToDate, https://www.uptodate.com/contents/coronavirus-disease-2019-covid-19-epidemiology-virology-clinical-features-diagnosis-and-prevention
37) WHO newsroom website, https://www.who.int/news-room/q-a-detail/q-a-similarities-and-differences-covid-19-and-influenza
38) WHO website, https://www.who.int/docs/default-source/coronaviruse/who-china-joint-mission-on-covid-19-final-report.pdf
39) Worldometers data website, https://www.worldometers.info/coronavirus/
40) Wu Z, McGoogan JM. Characteristics of and important lessons from the coronavirus disease 2019 (COVID-19) outbreak in China. JAMA. Published online, February 24, 2020, doi:10.1001/jama.2020.2648