Modeling Return of the Epidemic: Impact of Population Structure, Asymptomatic Infection, Case Importation and Personal Contacts

Xinhua Yu[1]

[1]Corresponding author address:

Xinhua Yu, MD PhD

Division of Epidemiology, Biostatistics and Environmental Health

School of Public Health

University of Memphis

Email: xyu2@memphis.edu

Phone: 901-678-3433

Fax: 901-678-1705

Abstract

Background: Proactive interventions have halted the pandemic of coronavirus infected disease in some regions. However, without reaching herd immunity, the return of epidemic is possible. We investigate the impact of population structure, case importation, asymptomatic cases, and the number of contacts on a possible second wave of epidemic through mathematical modelling.

Methods: we built a modified Susceptible-exposed-Infectious-Removed (SEIR) model with parameters mirroring those of the COVID-19 pandemic and reported simulated characteristics of epidemics for incidence, hospitalizations and deaths under different scenarios.

Results: A larger percent of old people leads to higher number of hospitalizations, while a large percent of prior infection will effectively curb the epidemic. The number of imported cases and the speed of importation have small impact on the epidemic progression. However, a higher percent of asymptomatic cases slows the epidemic down and reduces the number of hospitalizations and deaths at the epidemic peak. Finally, reducing the number of contacts among young people alone has moderate effects on themselves, but little effects on the old population. However, reducing the number of contacts among old people alone can mitigate the epidemic significantly in both groups, even though young people remain active within themselves.

Conclusion: Reducing the number of contacts among high risk populations alone can mitigate the burden of epidemic in the whole society. Interventions targeting high risk groups may be more effective in containing or mitigating the epidemic.

Introduction

The pandemic of coronavirus infected disease (COVID-19) caused by the novel Severe Acute Respiratory Syndrome Coronavirus 2 (SARS-CoV2) [1, 2] has significantly impacted people's daily life and led to a global public health crisis [3]. As of April 14, 2020, there were 1,973,715 confirmed cases and 125, 910 deaths worldwide. The US accounted for 605,193 cases and 25,757 deaths (https://coronavirus.jhu.edu/map.html). To contain or mitigate the epidemic, countries and regions affected by the COVID-19 epidemic have mandated various nonpharmaceutical interventions such as meticulous contact tracing, mass detection of virus infection, case isolation, social distancing, and closures of school and non-essential business. As a result, the epidemic was blunted in some countries, and daily new case counts are decreasing in many places.

However, the partially controlled or blunted epidemic leaves the source of infection and also a large pool of susceptible people in the community, posing a danger of re-emerging outbreak. Two important factors may contribute a second wave of epidemic. First, unlike the 2003 SARS epidemic in which mainly symptomatic cases are infectious [4], asymptomatic infection of the SARS-CoV2 can transmit disease [5-9]. Studies have detected virus shedding in nasopharyngeal swap samples among asymptomatic cases [10]. A few case reports have shown some cluster of cases initiated by asymptomatic cases [5, 7, 9]. Researchers have postulated that asymptomatic and pre-symptomatic cases may play a significant role in sustaining the community transmission [6].

Second, government leaders have been pressed to allow people to return to normal work and life to avoid economic recession. After social activities are restored, both international and domestic

travel ban will be lifted. Imported symptomatic and asymptomatic cases may kindle a second wave of epidemic in the community [6]. For example, despite Singapore has implemented possibly the most rigorous contact tracing, personal protection and social distancing measures, an unexpected surge of new cases has been observed, with daily newly confirmed cases doubled from 142 in April 7 to 287 in April 8, and still 334 in April 14 (https://www.gov.sg/article/covid-19-cases-in-singapore). As of this writing, the source of this sudden increase is still under investigation.

From the health services perspective, the number of severe cases who require medical care is the most important indicator of the burden of epidemic. Heath care providers, hospital beds, and intensive care units (ICU) are limited resources. One main purpose of mitigating the epidemic is to alleviate the impact of epidemic on healthcare resources. Several reports have shown that about 20% of symptomatic COVID-19 cases require hospitalizations, and of them, about 30-50% may require ICU [11-13] (also https://gis.cdc.gov/grasp/COVIDNet/COVID19_3.html). More importantly, old people or people with existing chronic conditions have worse outcome than young people. For example, the mortality rate for age 50 or younger is below 1%, while the mortality rate increases to more than 10% among people aged 80 or above in the US [14].

Epidemic model simulation has been used extensively to estimate essential epidemic parameters, evaluate the epidemic progression and provide critical guidance to policy makers. Simulation studies based on early epidemic data from Wuhan, China and incorporating human travel and migration information have provided more accurate picture of epidemic [15-19]. In addition, based on simulating individual behaviors under realistic societal settings, several key simulation analyses have informed the policy makers about the effectiveness of various intervention strategies to halt the epidemic [20-23]. Another simulation study updates daily about the impact

of COVID-19 epidemic on the use of health care resource and predicts the trend and peaks of health care use in the US [24] (https://covid19.healthdata.org/united-states-of-america).

In this study, we will build a modified Susceptible-Exposed-Infectious-Removed (SEIR) model [25] to simulate the COVID-19 epidemic and investigate the impact of population structure, asymptomatic cases, case importation, and the number of contacts on the epidemic progression. We will explicitly evaluate the changes of hospitalizations and mortality under various scenarios for young and old people. Our analysis will provide theoretical evidence of possible strategies to prepare for a second wave of epidemic.

Method

Modified SEIR Model

The modified SEIR model is shown in Figure 1 (also see the modeling framework section in supplemental documents for details). Briefly, we divide the population into the susceptible population (S), self-quarantined susceptible people (Q), exposed but not infectious people (E), infectious compartment which includes those cases from quarantined susceptible (I_Q), symptomatic cases (I_D), asymptomatic cases (I_U) (also those with mild symptoms), and the removed compartment which includes those hospitalized (H), recovered (R), and dead (D). The self-quarantined persons are not based on individual contact tracing but rather refer to those who are alert to any possible infection in the community and may avoid contacting with any exposed persons. They are a special susceptible population who will not infect others if they are infected. Asymptomatic cases are often undiagnosed or unreported.

We also assume a dynamic population in which the numbers of imported susceptible persons and exposed persons (often have no symptom) are proportional (f_1 and f_2) to the size of total population (i.e., larger regions attract more visitors). We further assume the death rate due to other causes is a constant for all populations. For those who are symptomatic, diagnosed with the infection and hospitalized, their deaths are attributed to the infection or complications of the infection. In addition, at the beginning of the simulation, some proportion of the population have past infection (or immunized) (P). Therefore, the total population at the time t is $N(t) = S(t) + Q(t) + E(t) + I_D(t) + I_U(t) + I_Q(t) + H(t) + R(t) + P_0$.

To account for population heterogeneity, we also apply the basic framework (Figure 1) to both young (age < 65) and old (age >=65) populations. The two flowcharts are connected through cross-infection due to mutual contacts. The combined flowcharts can be translated into a set of ordinary differential equations (see supplemental document). The key equations relevant to the drive of epidemic and cross-infection between two age groups are for the change of exposed people at time t (subscript y for young, and s for old people, with time indicator t suppressed):

$$\frac{dE_y}{dt} = f_{y2}N_y + \left(b_{y1}I_{yD}+b_{y2}I_{yU}\right)k_y\frac{S_y}{N_y} + (b_{s1}I_{sD}+b_{s2}I_{sU})k_{ys}\frac{S_y}{N_y} - v_{y1}E_y - v_{y2}E_y - u_yE_y$$

$$\frac{dE_s}{dt} = f_{s2}N_s + (b_{s1}I_{sD}+b_{s2}I_{sU})k_s\frac{S_s}{N_s} + \left(b_{y1}I_{yD}+b_{y2}I_{yU}\right)k_{ys}\frac{S_s}{N_s} - v_{s1}E_s - v_{s2}E_s - u_sE_s$$

Specifically, the first equation models the exposure dynamics among young people. It includes imported exposed people ($f_{y2}N_y$), newly exposed people through contacting within the young people ($\left(b_{y1}I_{yD}+b_{y2}I_{yU}\right)k_y\frac{S_y}{N_y}$) and contacting between young susceptible and infected old people $(b_{s1}I_{sD}+b_{s2}I_{sU})k_{ys}\frac{S_y}{N_y}$. Then some percent of exposed young people become

symptomatic cases ($v_{y1}E_y$), and some become asymptomatic cases ($v_{y2}E_y$). A fixed percent of exposed people will die of other diseases (u_yE_y). The second equation for the exposure dynamics among old people can be interpreted similarly.

Model parameterization

The model involves many parameters. Their definitions, default values, and ranges are listed in the supplemental document (supp. Table 1). A few key parameters are listed in Table 1. The model parameters are set to daily rates and all the durations between various stages of disease progression follow some exponential distribution. The key parameter, virus infectivity, is based on the basic reproduction number (R_0), defined as the average number of secondary cases infected by an index case. Based on the basic SIR model, it can be estimated as (average contacts)*(infectivity per contact)*(serial interval). Early reports on basic reproduction number is 2.2, ranging from 2-3 [1]. Recent reports, however, suggested a much higher number, some as high as 5.7 [18, 26, 27]. We adopt the R_0=2.6 as a conservative estimate[28, 29]. The number of average contacts in the population ranges 2-30 [21, 30]. We assume a moderate 10 contacts for young, 7 contacts for old, and 3 contacts between young and old people in this study. Some seniors may have more contacts than the default value due to group living or regular community gathering. They are not considered in this population level modeling. The serial interval is the average duration between the infectious point (often symptom onset) of the index case and the symptom onset (or diagnosis) of secondary cases. Reported serial intervals vary significantly across different studies, with an average of 5 days [15, 17, 21, 31-33]. We adopt a conservative estimate of 6 days for young and 4 days for old people, ranging 3-10 days. Finally, we assume an overall hospitalization rate of 10%, as commonly reported in the United States (https://www.cdc.gov/coronavirus/2019-ncov/cases-updates/). Hospital stay is 7-21 days, as most

hospitalized people are elderly patients. The in-hospital mortality rate is 5% for young and 20% for old symptomatic patients, and an overall mortality of 1% and 10% for young and old patients, respectively [11, 13, 34-36]. The recovery duration for those who are not hospitalized is 5-20 days, typical for non-severe pneumonia.

Model simulation and Sensitivity analysis

The default model is set on a region with 1 million residents, consisting of 20% elderly people and 20% of total population with past infection (or immunized). There is no existing symptomatic or asymptomatic case, and no person in self-quarantine in the region. We assume only one imported young exposed case every two days for 20 days (i.e., 10 imported cases).

Analyses were performed based on the ranges of parameter estimates. We varied one parameter at a time, holding other factors at their default values. Key epidemic measures were presented in tables. Multi-parameter analyses with two or more factors varying together were also performed, important findings were discussed in the text. Additional outputs were included in the supplemental materials.

The R package EpiModel was used for simulating the deterministic epidemic models[37]. The R codes for simulating the modified SEIR epidemic models are available (*github address after review*).

This study is deemed exempt from ethics approval as the research involves no human subjects and we use publicly available data.

Results

Model calibration

Under the default model setting, all epidemic measures reflect the model parameters satisfactorily (Table 2, also refer to supplemental Table 1). Starting with ten imported infectious persons and assuming 40% asymptomatic cases at the peak of epidemic, the epidemic reaches peak quickly within 73 days and lasts 172 days. It is ten days quicker among old people than among young people (Table 2). The epidemic curves for incident cases (symptomatic and asymptomatic), hospitalizations and deaths by age groups are typical (Supplemental Figure 2). The modeling results in an overall hospitalization rate of 14.1%. The in-hospital mortality rate is 5.0% for young and 20.3% for old people, with an overall mortality rate of 1.9%, similar to those empirical measures in the COVID-19 epidemic in the US. Therefore, the default model represents the current COVID-19 epidemic sufficiently well.

Impact of population structure

As summarized in Table 3, the size of region and small percent change of self-quarantined susceptible do not change the epidemic progression except for the total number of cases. A smaller percent of elderly slows down the epidemic, while a much higher percent of elderly does not change the epidemic curve significantly. As expected, when over 60% people have prior infection, the epidemic takes very long to reach the peak and results in substantial fewer cases. The effects are similar in both young and old people (supplemental Table 2a & 2b).

Impact of asymptomatic cases

Both the percent and infectivity of asymptomatic cases were investigated (Table 3). An increase of the percent of asymptomatic cases from 10% to 30% postpones the epidemic peak by 12 days

due to less infectivity of asymptomatic cases, and results in significantly fewer hospitalizations and deaths. On the other hand, a higher infectivity of asymptomatic cases (e.g., 100% of symptomatic cases) results in a fast developing and narrow epidemic curve which reaches the peak within 60 days. There are more hospitalizations and deaths at the epidemic peak compared with the default model, both assumed 40% asymptomatic cases. In addition, a change of the percent of asymptomatic cases among old people leads to larger changes in hospitalizations and deaths than that of young people (Supplemental Table 2a & 2b). For example, comparing 60% with 40% asymptomatic cases, the total hospitalizations are reduced only by half among old people, while it is a two third decrease among young people. Furthermore, when the effects of the percent and infectivity of asymptomatic cases are combined, for example, in a low risk epidemic with 60% asymptomatic cases but with a lower (30%) infectivity, the epidemic reaches its peak slower for both young and old people with peak hospitalizations almost half of the default model (40% asymptomatic cases and 50% infectivity) (supplemental Figure 3).

Impact of case importing process

This epidemic model is initiated by imported infectious persons (may asymptomatic or pre-symptomatic cases). A daily arrival of two infectious people speeds up the epidemic by 8 days compared with one case every two days in the default model (Table 3). The magnitudes of epidemic are similar between different importation scenarios. In addition, a longer importing duration shifts the epidemic only slightly. Finally, if we assume all the imported cases are asymptomatic cases, the epidemic curves are not significantly different from that of default model (supplemental Figure 4).

Impact of the number of contacts

The number of contacts affect the epidemic curves in a complicate way (Figure 2 for hospitalizations, and supplemental Figure 5 and 6 for incidence and deaths). Limiting the number of contacts only among young people changes the course of epidemic among themselves moderately (Figure 2a). It has little impact on the epidemic curves among old people, and subsequently does not change the burden of overall hospitalizations, as old people have more hospitalizations than young people. On the other hand, limiting contacts among old people alone not only changes the epidemic curves among themselves, but also significantly affects those of young people (Figure 2b and 2c), even though young people maintain a lot of contacts within themselves. For example, when limiting 3 contacts among old people, 10 contacts among young people, and 3 contacts between young and old people (Figure 2c), at the peak of epidemic, the maximum hospitalizations are 618 for young people and 882 for old people. At the end of epidemic, the total hospitalizations are 25,358 and 33,741, and total deaths are 1,268 and 6,858 for young and old people, respectively, all significantly lower than those of default model (Table 2). The times to the epidemic peak are also postponed in both curves. When both young and old people reduce contacts to 3 per day, such as under the stay-at-home rule, the epidemic curves on hospitalizations are significantly mitigated in both groups (Figure 2d).

Finally, we consider two extreme scenarios: 1) high risk scenario: assuming one imported case per day continuously throughout the epidemic, 30% asymptomatic cases at the epidemic peak, and the same infectivity between symptomatic and asymptomatic cases; 2) low risk scenario: assuming one imported case every two days for twenty days, 60% asymptomatic cases, and asymptomatic cases have only 30% infectivity of symptomatic cases. In both scenarios, limiting contacts among old people alone still has significant impact on hospitalizations in both age

groups, and a larger relative difference in the low risk scenario than high risk scenario (Figure 3 and supplemental Figure 7).

Discussion

We created a modified SEIR model and parameterized it with estimates from the current COVID-19 epidemic. Our scenario analyses suggest that unless the population have reached herd immunity (e.g., over 60% people are immune to the disease, assuming a reproduction number of 2.6 [28, 29]), a small number of imported cases within a short duration may rekindle the epidemic among the large susceptible pool. Despite young imported cases and only 3 contacts between young and old people, infection can quickly transmit into old people. Interestingly, our model demonstrates that reducing the number of contacts among old people alone can not only slowdown the epidemic but also reduce the magnitude of the epidemic among both young and old people. This spillover effect implies that interventions targeting high risk groups such as elderly population can have a larger impact on the whole society, without significantly disturbing the working life among young people.

Our findings are consistent with that of prior simulation studies and real life experience in several Asian countries [1, 15, 16, 20, 22, 24]. Many countries have implemented more proactive interventions such as school closing and stay at home rules, which have mitigated the epidemic in many regions.

One of the most effective strategies to curb an epidemic is to reduce personal interactions through social distancing and prohibiting large gatherings [21, 30, 38]. Our simulations have shown that reducing the number of contacts among young people alone does not affect the

burden of epidemic significantly. On the other hand, reducing the number of contacts among old people alone not only mitigates the impact of epidemic among themselves, but also changes the course of epidemic among young people, despite they still remain very active. Old people often have weaker immune system and multiple underlying chronic conditions. If infected with the virus, they are more likely to be symptomatic and more infectious because their bodies are not able to eliminate virus effectively. Therefore, during an epidemic such as COVID-19, old people are more likely to be hospitalized and die from the complications of infection. Thus, protecting old people not only decreases their risk of being infected but also reduces the burden of epidemic in the whole society.

With growing availability of detection kits during the COVID-19 epidemic, more asymptomatic or mild symptomatic cases are identified. Ultimately, an optimal view is asymptomatic cases may account for 60% of infections. However, recent research and case reports have confirmed that asymptomatic or pre-symptomatic cases can shed enough quantify of virus to be infectious [5-8, 10]. Furthermore, if the infectivity of asymptomatic cases is similar to that of symptomatic cases, a faster epidemic will occur. Despite more asymptomatic cases at the peak of epidemic, there are also significantly more hospitalizations and deaths, while may overwhelm the health care system. With a lower infectivity (30% infectivity), the epidemic reaches its peak later and results in half of hospitalizations at the peak compared with the default model (Supplemental Figure 3). In addition, a closely related issue is case importation[23]. Imported cases are often pre-symptomatic, asymptomatic or with mild symptoms. They seed of a second outbreak, even with just a few cases. Therefore, proactively identifying asymptomatic cases and isolating them thereafter will prevent the occurrence of an epidemic[20].

Our study has some strengths. We devised a modified SEIR model to incorporate both symptomatic and asymptomatic cases. We emphasized population heterogeneity such as age structure in the model. We included a self-quarantined group who will not infect other people if they are infected with the virus. Naturally, these settings can be extended to represent other high risk or special groups with revised parameters. In addition, we separated hospitalization from other removed compartments to explicitly estimate the impact of an epidemic on hospitalizations. Furthermore, we explored a few key determinants of epidemic explicitly, leading to many insights on epidemic prevention strategies.

There are a few limitations in our study. As inherent in all modeling studies, simulation interpretations are heavily dependent on model assumptions and parameter estimations. Our epidemic model is a population model. Although we take account of population heterogeneity such as age in the current model, our age group is overly broad. A more detained age grouping scheme, including children, young adults, middle age group, and elderly, may reflect the age-specific epidemic more realistically. In addition, we assume random mixing within and between the groups. As a population model, we cannot assess the impact of individual behaviors such as the way of reducing contacts, social distancing and travelling. Furthermore, it ignores clustering within the population such as senior group living, community gatherings (e.g., churches, community centers), worksites and schools. These clusters are hotbeds for superspreading events which may lead to a sudden increase of new cases and overwhelm the healthcare system unexpectedly. Furthermore, the quarantine compartment in the model is not contact tracing based. Modeling contact tracing based quarantine is more relevant to public health interventions[39]. Therefore, the goal of our future research is to exploring the effect of these factors with stochastic simulations of individual behavior[22, 40] and network analysis[41]. Additionally, our

model is set on a mid-size region with 1 million residents. We did not intend to model pandemic, as all prevention strategies are ultimately local. Finally, out study only examines a small subset of scenarios during the epidemic. Multi-interventions are more effective in mitigating an epidemic but less sustainable in the long run. After the initial epidemic ends, society will return to normal, and only one or two interventions such as social distancing may be practiced, often partially. Thus, one parameter analysis under various scenarios is important for evaluating the probability of a second epidemic.

In summary, with a modified SEIR model, we have demonstrated that simple intervention strategies such as reducing the number of contacts through social distancing, even among high risk population alone, can not only reduce the risk of infection and alleviate disease burden among themselves, but also mitigate the impact of a second epidemic in the whole society.

Acknowledgments

The author wishes to acknowledge the support from FedEx Institute of Technology at the University of Memphis for the data science cluster seed grant fund. The funder plays no role in design, analysis and report the current study.

Conflict of Interest: None.

References:

[1] Li, Q., et al., *Early Transmission Dynamics in Wuhan, China, of Novel Coronavirus-Infected Pneumonia.* N Engl J Med, 2020. **382**(13): p. 1199-1207.

[2] Zhu, N., et al., *A Novel Coronavirus from Patients with Pneumonia in China, 2019.* N Engl J Med, 2020. **382**(8): p. 727-733.

[3] *Pew Research Center: Most Americans Say Coronavirus Outbreak Has Impacted Their Lives.* 2020, Pew Research Center.

[4] Peiris, J.S., et al., *The severe acute respiratory syndrome.* N Engl J Med, 2003. **349**(25): p. 2431-41.

[5] Li, C., et al., *Asymptomatic and Human-to-Human Transmission of SARS-CoV-2 in a 2-Family Cluster, Xuzhou, China.* Emerg Infect Dis, 2020. **26**(7).

[6] Li, G., et al., *Asymptomatic and Presymptomatic Infectors: Hidden Sources of COVID-19 Disease.* Clin Infect Dis, 2020.

[7] Pan, X., et al., *Asymptomatic cases in a family cluster with SARS-CoV-2 infection.* Lancet Infect Dis, 2020. **20**(4): p. 410-411.

[8] Zhou, J., et al., *Observation and analysis of 26 cases of asymptomatic SARS-COV2 infection.* J Infect, 2020.

[9] Bai, Y., et al., *Presumed Asymptomatic Carrier Transmission of COVID-19.* JAMA, 2020.

[10] Le, T.Q.M., et al., *Severe Acute Respiratory Syndrome Coronavirus 2 Shedding by Travelers, Vietnam, 2020.* Emerg Infect Dis, 2020. **26**(7).

[11] Guan, W.J., et al., *Clinical Characteristics of Coronavirus Disease 2019 in China.* N Engl J Med, 2020.

[12] Huang, C., et al., *Clinical features of patients infected with 2019 novel coronavirus in Wuhan, China.* Lancet, 2020. **395**(10223): p. 497-506.

[13] Zhou, F., et al., *Clinical course and risk factors for mortality of adult inpatients with COVID-19 in Wuhan, China: a retrospective cohort study.* Lancet, 2020. **395**(10229): p. 1054-1062.

[14] CDC, *Severe Outcomes Among Patients with Coronavirus Disease 2019 (COVID-19) — United States, February 12–March 16, 2020.* MMWR Morb Mortal Wkly Rep, 2020(69): p. 343-346.

[15] Kucharski, A.J., et al., *Early dynamics of transmission and control of COVID-19: a mathematical modelling study.* Lancet Infect Dis, 2020.

[16] Chen, T.M., et al., *A mathematical model for simulating the phase-based transmissibility of a novel coronavirus.* Infect Dis Poverty, 2020. **9**(1): p. 24.

[17] Du, Z., et al., *Serial Interval of COVID-19 among Publicly Reported Confirmed Cases.* Emerg Infect Dis, 2020. **26**(6).

[18] Nishiura, H., N.M. Linton, and A.R. Akhmetzhanov, *Serial interval of novel coronavirus (COVID-19) infections.* Int J Infect Dis, 2020. **93**: p. 284-286.

[19] Roosa, K., et al., *Real-time forecasts of the COVID-19 epidemic in China from February 5th to February 24th, 2020.* Infect Dis Model, 2020. **5**: p. 256-263.

[20] Hellewell, J., et al., *Feasibility of controlling COVID-19 outbreaks by isolation of cases and contacts.* Lancet Glob Health, 2020. **8**(4): p. e488-e496.

[21] Prem, K., et al., *The effect of control strategies to reduce social mixing on outcomes of the COVID-19 epidemic in Wuhan, China: a modelling study.* Lancet Public Health, 2020.

[22] Ferguson, N., et al., *Report 9: Impact of non-pharmaceutical interventions (NPIs) to reduce COVID-19 mortality and healthcare demand* 2020, Imperial College: UK.
[23] Chinazzi, M., et al., *The effect of travel restrictions on the spread of the 2019 novel coronavirus (COVID-19) outbreak.* Science, 2020.
[24] IHME, *Forecasting COVID-19 impact on hospital bed-days, ICU-days, ventilatordays and deaths by US state in the next 4 months. IHME COVID-19 health service utilization forecasting team*. 2020.
[25] Lipsitch, M., et al., *Transmission dynamics and control of severe acute respiratory syndrome.* Science, 2003. **300**(5627): p. 1966-70.
[26] Sanche, S., et al., *High Contagiousness and Rapid Spread of Severe Acute Respiratory Syndrome Coronavirus 2.* Emerg Infect Dis, 2020. **26**(7).
[27] Zhao, S., et al., *The basic reproduction number of novel coronavirus (2019-nCoV) estimation based on exponential growth in the early outbreak in China from 2019 to 2020: A reply to Dhungana.* Int J Infect Dis, 2020.
[28] Imai, N., et al., *Report 3: Transmissibility of 2019-nCoV* 2020, Imperial College of London: London, OK.
[29] Wu, J.T., K. Leung, and G.M. Leung, *Nowcasting and forecasting the potential domestic and international spread of the 2019-nCoV outbreak originating in Wuhan, China: a modelling study*. Lancet, 2020. **395**(10225): p. 689-697.
[30] Mossong, J., et al., *Social contacts and mixing patterns relevant to the spread of infectious diseases.* PLoS Med, 2008. **5**(3): p. e74.
[31] Zhang, J., et al., *Evolving epidemiology and transmission dynamics of coronavirus disease 2019 outside Hubei province, China: a descriptive and modelling study.* Lancet Infect Dis, 2020.
[32] Zhao, S., et al., *Serial interval in determining the estimation of reproduction number of the novel coronavirus disease (COVID-19) during the early outbreak.* J Travel Med, 2020.
[33] Lauer, S.A., et al., *The Incubation Period of Coronavirus Disease 2019 (COVID-19) From Publicly Reported Confirmed Cases: Estimation and Application.* Ann Intern Med, 2020.
[34] Wu, Z. and J.M. McGoogan, *Characteristics of and Important Lessons From the Coronavirus Disease 2019 (COVID-19) Outbreak in China: Summary of a Report of 72314 Cases From the Chinese Center for Disease Control and Prevention.* JAMA, 2020.
[35] Russell, T.W., et al., *Estimating the infection and case fatality ratio for coronavirus disease (COVID-19) using age-adjusted data from the outbreak on the Diamond Princess cruise ship, February 2020.* Euro Surveill, 2020. **25**(12).
[36] Verity, R., et al., *Estimates of the severity of coronavirus disease 2019: a model-based analysis.* Lancet Infect Dis, 2020.
[37] Jenness, S.M., S.M. Goodreau, and M. Morris, *EpiModel: An R Package for Mathematical Modeling of Infectious Disease over Networks.* Journal of Statistical Software, 2018. **84**.
[38] Pan, A., et al., *Association of Public Health Interventions With the Epidemiology of the COVID-19 Outbreak in Wuhan, China.* JAMA, 2020.
[39] Day, T., et al., *When is quarantine a useful control strategy for emerging infectious diseases?* Am J Epidemiol, 2006. **163**(5): p. 479-85.

[40] Peak, C.M., et al., *Comparing nonpharmaceutical interventions for containing emerging epidemics.* Proc Natl Acad Sci U S A, 2017. **114**(15): p. 4023-4028.

[41] Keeling, M.J. and K.T. Eames, *Networks and epidemic models.* J R Soc Interface, 2005. **2**(4): p. 295-307.

[42] Wang, X., et al., *Clinical characteristics of non-critically ill patients with novel coronavirus infection (COVID-19) in a Fangcang Hospital.* Clin Microbiol Infect, 2020.

Table 1: Parameters used in the epidemic models

Definition	Default value	Range	References
Importing rate for exposed persons	1 every two days only for young population, lasts for 20 days	0-2 cases per day, proportional to the size of population, with larger regions have more imported cases	Arbitrary
Reproduction number, the average number of secondary cases infected by an index case	2.6	1.5-4	[1, 18, 26, 27, 29]
Contact rate per capita	10 for young, 7 for old, and 3 for interactions between young and old people	Each with 2-30 contacts range. Senior group living or community gathering is not considered.	[21, 30]
Serial interval: duration between infection point (often symptom onset) of index case and the onset of secondary cases infected by him	6 days for young, 4 days for old	3-10 days, average 5 days	[15, 17, 21, 31, 32]
Incubation period: duration between exposure and symptom onset	5 days for young, 4 days for old	2-14 days	[33]
Recovery duration	7 days for young and 14 days for old	4-20 days	[42]
Hospitalization rate	5% for young, and 30 % for old	5% - 50%. average 10% hospitalization among diagnosed, US	
Hospital stay	7 days for young, and 21 for old	4-30 days	[12, 13, 34]
Mortality among hospitalized	5% for young, and 20% for old people	1% - 50%	[12-14, 34, 42]

Table 2: Basic epidemic measures from the simulation with default model parameterization

	Young (Age < 65) (susceptible No. = 640,000)	Old (Age >= 65) (susceptible No. = 160,000)	Total population (susceptible No. = 800,000)
Days to epidemic peak (duration till =<5 cases)	76 (172)	66 (122)	73 (172)
Susceptible at epidemic peak No. (% total)	347,117 (43.4%)	64,398 (40.2%	427,443 (53.4%)
Maximum quarantined No. (% susceptible)	3,156 (1.8%)	132 (1.5%)	3,210 (1.8%)
Maximum new cases	18,805 (5.4%)	7,735 (12.0%)	23,193 (5.4%)
Symptomatic No. (incidence %)	11,145 (3.2%)	4,614 (7.2%)	13,742 (3.2%)
Asymptomatic No. (incidence %)	7,660 (2.2%)	3,121 (4.8%)	9,451 (2.2%)
Maximum new hospitalizations No. (%among symptomatic)	732 (6.6%)	1,247 (27.0%)	1,791 (13.0%)
Maximum new deaths No. (%among symptomatic) (%among hospitalized)	33 (0.3%) (4.5%)	161 (3.5%) (12.9%)	191 (1.4%) (10.7%)
Total cases within 240 days No (incidence %)	553,851 (86.5%)	158,010 (98.8%)	711,861 (89.0%)
Symptomatic No. (incidence %)	331,168 (51.7%)	94,354 (59.0%)	425,522 (53.2%)
Asymptomatic No. (incidence %)	222,683 (34.8%)	63,656 (39.8%)	286,339 (35.8%)
Total hospitalizations No. (% among symptomatic)	25,707 (7.8%)	34,408 (36.5%)	60,115 (14.1%)
Total deaths No. (%among symptomatic) (%among hospitalized)	1,285 (0.4%) (5.0%)	6,998 (7.4%) (20.3%)	8,283 (1.9%) (13.8%)

Note: Parameters for the default model are listed in the supplemental table 1. Briefly, the population size is 1 million residents, 20% percent of elderly, 20% prior infection, importing young cases at 1 per two days for 20 days (10 cases), 40% mild/asymptomatic cases among unquarantined susceptible, 10 contacts for young people, 7 contacts for old people, and 3 contacts between young and old people. The peak self-quarantined is 2% of the susceptible population but changes with the prevalence of disease. The hospitalization rate is 5% for young, and 30% for old symptomatic cases, respectively. The mortality rate is 5% for hospitalized young people and 20% for hospitalized elderly. There are no prior symptomatic or asymptomatic cases or quarantined people in the total population. The modeling duration is 240 days.

Table 3: Impact of population structure, asymptomatic infection and importing process on the epidemic progression

			Maximum at the epidemic peak				Total	
Parameters	levels	Time to peak (Duration)	New symptomatic	New asymptomatic	New hospitalizations	New deaths	Hospitalizations	Deaths
Default model		73 (164)	13,742	9,451	1,791	191	60,115	8,283
Size of region	500,000	73 (164)	6,871	4,726	896	95	30,057	4,141
	100,000	72 (147)	1,374	945	179	19	6,011	828
	50,000	73 (140)	687	473	90	10	3,006	414
% Elderly	10%	77 (192)	9,808	6,770	995	103	43,925	4,833
	30%	73 (161)	17,108	11,716	2,500	273	75,632	11,716
	40%	73 (155)	19,650	13,407	3,139	352	90,792	15,182
% Prior infection	30%	81 (189)	10,037	6,875	1,385	155	51,025	7,147
	50%	110 (240+)	4,070	2,757	651	83	31,940	4,744
	60%	141 (240+)	1,953	1,312	345	48	21,676	3,356
% Self-quarantined	0.5%	73 (172)	13,545	9,520	1,758	188	58,178	8,163
	5%	73 (171)	14,432	9,239	1,907	199	67,121	8,715
	15%	73 (183)	15,990	8,790	2,185	217	84,913	9,801
% Asymptomatic cases at the peak	10%	54 (136)	29,936	3,719	3,412	322	92,515	12,448
	30%	66 (160)	17,558	8,501	2,313	241	71,646	10,076
	60%	78 (192)	6,453	11,792	964	110	35,036	5,065

Infectivity of asymp. vs symptomatic	30%	78 (185)	12,223	8,388	1,651	182	59,076	8,217
	70%	67 (159)	15,505	10,697	1,939	199	61,088	8,341
	100%	60 (145)	17,997	12,464	2,135	210	62,104	8,397
Imported young cases (per day)	0.25	76 (175)	13,740	9,454	1,789	191	60,091	8,279
	1	69 (168)	13,760	9,467	1,793	191	60,139	8,287
	2	65 (165)	13,760	9,470	1,794	191	60,164	8,291
Importing duration (days)	5	75 (175)	13,730	9,450	1,790	190	60,095	8,280
	10	73 (173)	13,739	9,455	1,790	191	60,109	8,282
	30	72 (172)	13,738	9,455	1,791	191	60,116	8,283

Figure 1: The Modified Susceptible, Exposed, Infectious, and Removed (SEIR) Model

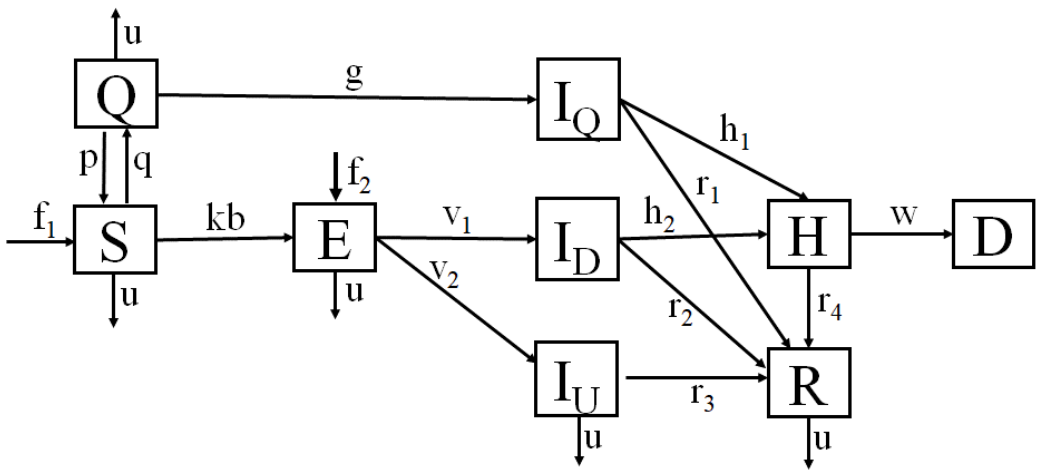

Note: The compartments are susceptible (S), self-quarantined susceptible (Q), exposed (E), infectious (those cases from quarantined I_Q, symptomatic cases I_D and asymptomatic cases I_U), and removed (hospitalized: H, Dead: D, and Recovered: R). detailed explanations for parameters are in the text and supplemental documents

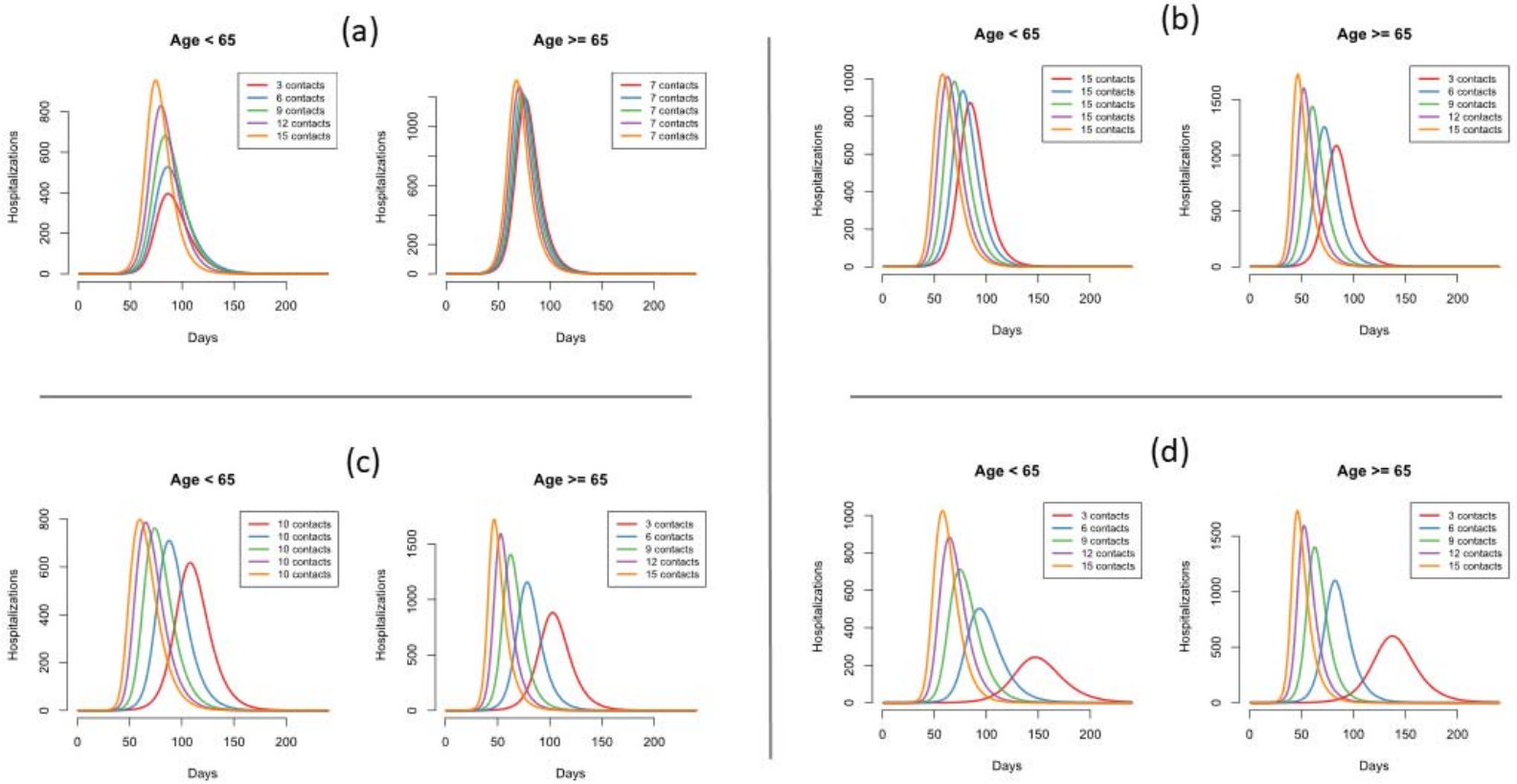

Figure 2: Impact of the number of contacts on the epidemic curves of hospitalizations among young and old people

Note: the default model includes 40% asymptomatic cases and 50% infectivity of asymptomatic cases

Figure 3: Impact of the number of contacts on the epidemic curves of hospitalizations for two scenarios

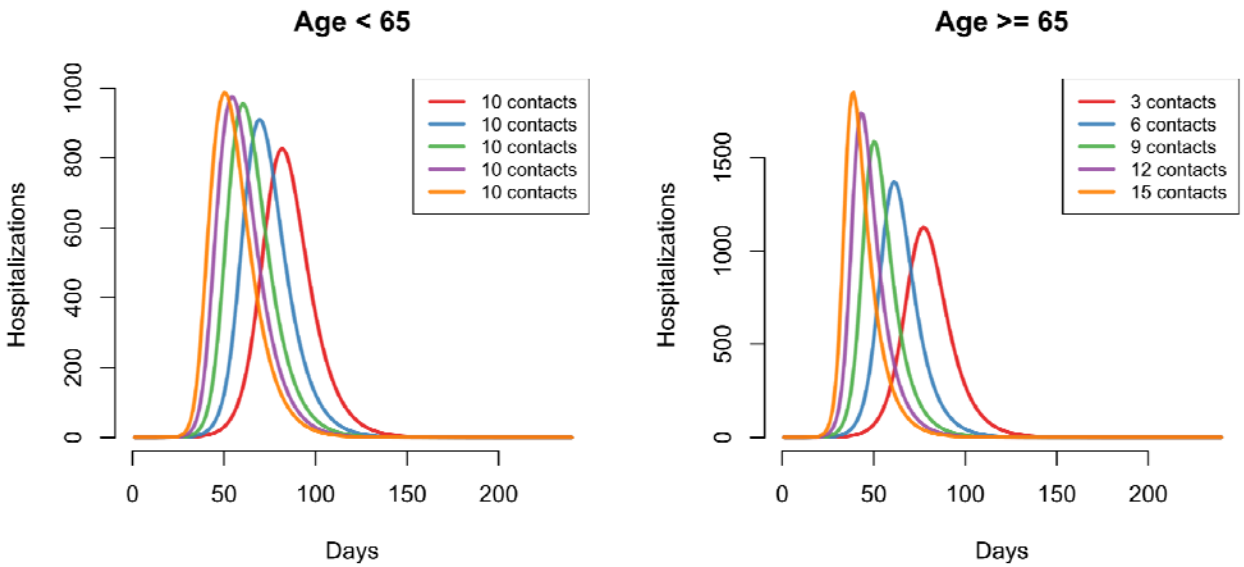

(a) High risk scenario: continuously one imported case per day, 30% asymptomatic, same infectivity between asymptomatic and symptomatic cases.

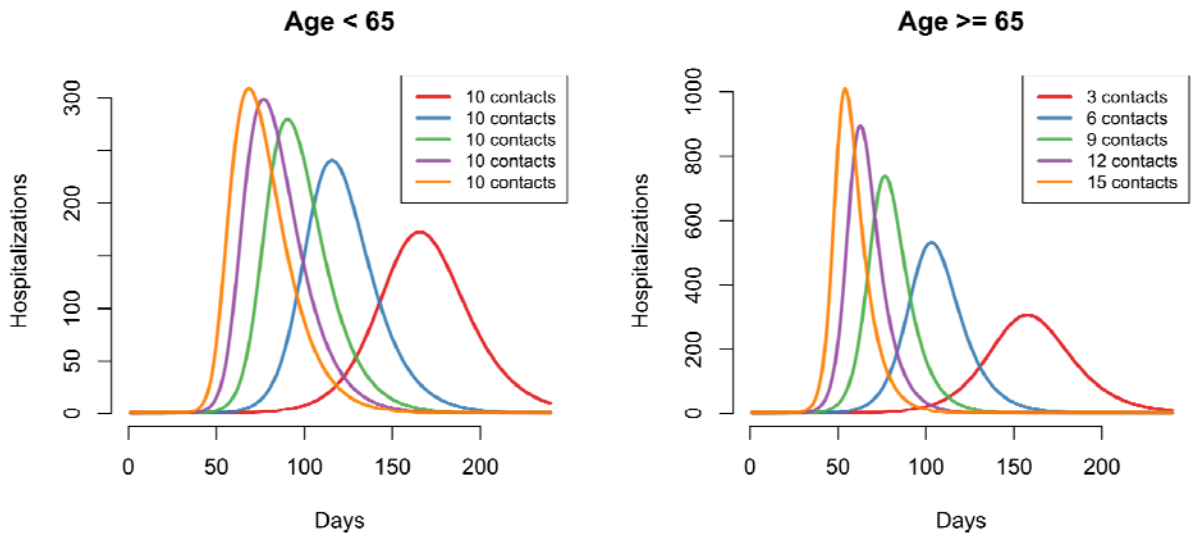

(b) Low risk scenario: one imported case every two days for twenty days, 60% asymptomatic, with 30% infectivity as symptomatic cases