medRxiv preprint doi: https://doi.org/10.1101/2020.04.04.20053264; this version posted April 7, 2020. The copyright holder for this preprint (which was not certified by peer review) is the author/funder, who has granted medRxiv a license to display the preprint in perpetuity. It is made available under a CC-BY-NC-ND 4.0 International license .

Familial clustering of erosive hand osteoarthritis

By

Nikolas H. Kazmers[1*], Kendra A. Novak[1], Zhe Yu[2], Huong D. Meeks[2], Gail L. Fulde[3], Joy L. Thomas[3], Tyler Barker[4,5], Michael J. Jurynec[1*]

Corresponding author: Michael J. Jurynec

Contact information: email: mjurynec@genetics.utah.edu; Phone: 801-581-4424; Address: Department of Orthopaedics, University of Utah, 15 N 2030 E, Bldg 533, Salt Lake City, UT 84112

[*]N.H.K. and M.J.J. contributed equally to the manuscript.

[1]Department of Orthopaedics, University of Utah, Salt Lake City, UT 84108

[2]Huntsman Cancer Institute, Utah Population Database, University of Utah, Salt Lake City, UT 84112

[3]Intermountain Healthcare, Precision Genomics, St. George, UT 84790

[4]Intermountain Healthcare, Precision Genomics, Murray, UT 84107

[5]Department of Nutrition and Integrative Physiology, University of Utah, Salt Lake City, UT 84112

NOTE: This preprint reports new research that has not been certified by peer review and should not be used to guide clinical practice.

medRxiv preprint doi: https://doi.org/10.1101/2020.04.04.20053264; this version posted April 7, 2020. The copyright holder for this preprint (which was not certified by peer review) is the author/funder, who has granted medRxiv a license to display the preprint in perpetuity. It is made available under a CC-BY-NC-ND 4.0 International license .

Abstract:

Objectives: Erosive hand osteoarthritis (EOA) is a severe and rapidly progressing form of osteoarthritis. Its etiology remains largely unknown, which has hindered development of successful treatments. Our primary goal was to test the hypothesis that EOA would demonstrate familial clustering in a large statewide population linked to genealogical records, which would suggest a genetic contribution to the pathogenesis of this condition. Our secondary purpose was to determine the association of potential risk factors with EOA.

Methods: Patients diagnosed with EOA were identified by searching medical records from a comprehensive statewide database, the Utah Population Database (UPDB). Affected individuals were then mapped to pedigrees to identify high-risk families with excess clustering of EOA as defined by a Familial Standardized Incidence Ratio (FSIR) of ≥ 2.0. The magnitude of familial risk of EOA in related individuals was calculated using Cox regression models. Association of potential EOA risk factors was analyzed using conditional logistic regression and logistic regression models.

Results: We identified 703 affected individuals linked to 240 unrelated high-risk pedigrees with excess clustering of EOA (FSIR ≥ 2.0). The relative risk of developing EOA was significantly elevated in first-degree relatives. There was a significant association with the diagnosis of EOA and age, sex, alcohol use, diabetes, and obesity.

Conclusions: Familial clustering of EOA observed in a statewide database indicates a potential genetic contribution to the etiology of the disease. Identification of causal gene variants in these high-risk families may provide insight into the genes and pathways that contribute to EOA onset and progression.

medRxiv preprint doi: https://doi.org/10.1101/2020.04.04.20053264; this version posted April 7, 2020. The copyright holder for this preprint (which was not certified by peer review) is the author/funder, who has granted medRxiv a license to display the preprint in perpetuity. It is made available under a CC-BY-NC-ND 4.0 International license .

Keywords: Erosive hand osteoarthritis, osteoarthritis, genetics, osteoarthritis cohort, osteoarthritis risk factors

Introduction:

Hand osteoarthritis (OA) is the most prevalent form of OA and is a major cause of disability.[1-7] Erosive hand osteoarthritis (EOA) is considered a more severe form of hand OA that affects the distal and proximal interphalangeal joints.[8-12] EOA is defined by its sudden onset, rapid progression, and radiological evidence of central subchondral erosions that have a 'gull-wing' or 'saw-tooth' appearance, collapse of the subchondral bone, and marginal osteophyte formation.[8, 13, 14] Despite the prevalence and severity of EOA[15, 16], there are no therapeutics that prevent the onset or limit the progression of the disease.[17]

The main obstacle to the development of disease-modifying therapies is limited understanding of the disease process.[18, 19] Hand OA is a heterogeneous disorder with significant genetic contribution. [20] Despite significant heritability of hand OA, very few genes and pathways have been discovered that modify the course of the disease.[6, 7] Even less is known about the genes that confer susceptibility to EOA.[21-23] EOA is suggested to have a familial contribution[24], but this analysis was limited to sibling pairs. The genetic studies of EOA to date have been limited by size and scope, which has hindered to identification of targets for development of therapeutic intervention.

medRxiv preprint doi: https://doi.org/10.1101/2020.04.04.20053264; this version posted April 7, 2020. The copyright holder for this preprint (which was not certified by peer review) is the author/funder, who has granted medRxiv a license to display the preprint in perpetuity. It is made available under a CC-BY-NC-ND 4.0 International license .

There have been several described risk factors associated with EOA including sex, alcohol consumption, and obesity, although there has been some discrepancy in risk factors between cohorts.[15, 16, 25, 26] Determining the contribution of risk factors in different cohorts allows for a more representative view of patient characteristics associated with the pathogenesis of EOA, and may provide clinically useful information to identify groups at an increased risk of disease development.

Our goal was to utilize the Utah Population Database (UPDB), a large statewide population database linked to comprehensive genealogical records[27-34] to perform a retrospective population-based study to i) test our hypothesis that EOA clusters in large families, ii) define the magnitude of familial risk of EOA, and iii) evaluate our cohort for potential risk factors associated with EOA.

Methods:

Study Approval: This study was approved by the Institutional Review Boards of the University of Utah and Intermountain Healthcare and by the Resource for Genetic and Epidemiologic Research.

The Utah Population Database (UPDB): Our study utilizes data drawn from UPDB (https://uofuhealth.utah.edu/huntsman/utah-population-database/). The UPDB is one of the world's largest and most comprehensive sources of linked population-based information for demographic and genetic studies. The UPDB contains data on over 11 million individuals from the late 18th century to the present. UPDB data represent Utah's

medRxiv preprint doi: https://doi.org/10.1101/2020.04.04.20053264; this version posted April 7, 2020. The copyright holder for this preprint (which was not certified by peer review) is the author/funder, who has granted medRxiv a license to display the preprint in perpetuity. It is made available under a CC-BY-NC-ND 4.0 International license .

population that appear in administrative records. Data are updated as they become available from statewide birth and death certificates, hospitalizations, ambulatory surgeries, and drivers licenses. UPDB creates and maintains links between the database and the medical records held by the two largest healthcare providers in Utah as well as Medicare claims. The multigenerational pedigrees representing Utah's founders and their descendants were constructed based on data provided by the Genealogical Society of Utah (GSU). Pedigrees spanning the past century have been expanded extensively based on vital records and, together with the GSU data, form the basis of the deep genealogical structure of the UPDB. The UPDB has been used in the early investigational stages to demonstrate familial clustering of diseases[35-37], and has been instrumental to the discovery of many disease causing genes, including breast and ovarian cancer[31, 34], colon cancer[28], and prostate cancer.[38]

Selection of Cases: We identified individuals diagnosed with erosive hand osteoarthritis (EOA) between October 1st, 2015 - December 31st, 2019 in the UPDB using the International Classification of Diseases (ICD) Tenth revisions code: ICD-10 M15.4. Individuals were excluded if they were also diagnosed with rheumatoid arthritis (ICD-9 714.0, ICD-10 M05.xx), other rheumatoid arthritis subtypes (ICD-9 714.2, ICD-10 M06.xx), or juvenile rheumatoid arthritis (ICD-9 714.3, ICD-10 M08.xx). Affected individuals were required to have relatives in the UPDB to be included in our study cohort so we could link them to pedigrees.

medRxiv preprint doi: https://doi.org/10.1101/2020.04.04.20053264; this version posted April 7, 2020. The copyright holder for this preprint (which was not certified by peer review) is the author/funder, who has granted medRxiv a license to display the preprint in perpetuity. It is made available under a CC-BY-NC-ND 4.0 International license .

High Risk Pedigree Identification: To determine if there was excess familial clustering of EOA in each pedigree, we utilized the Familial Standardized Incidence Ratio (FSIR).[39] FSIR allows for the quantification of familial risk of a disease by comparing the incidence of a disease in a family to its expected incidence in the general population. FSIR is a statistical method that accounts for the number of biological relatives in a pedigree, the degree of relatedness, and the age at which an individual is diagnosed. Exact one-sided Poisson probabilities were calculated under the null hypothesis of no familial enrichment of EOA. Individuals were grouped into fourteen categories based on age (0-30, 31-40, 41-50, 51-60, 61-70, 71-80, and 81-120) and sex. To determine the incidence ratio, the number of years prior to and after diagnosis is calculated for all affected and unaffected individuals, and then the number of living diagnosed years is divided by the number of living undiagnosed years. To determine the pedigree incidence ratio, the UPDB was analyzed to identify the founders of pedigrees containing an affected individual, the affection status of every individual biological relative in each pedigree was determined, and incidence ratio is calculated as described above. The pedigree's incidence ratio/whole population incidence ratio was used to determine the FSIR. High-risk pedigrees were selected if they had two or more living affected individuals, and if the FSIR was ≥ 2 and significant ($p < 0.05$) using a chi-squared test as described by Kerber.[39]

Familial Risk Determination: The magnitude of familial risk was estimated from cox regression models, adjusting for, sex, birth year, the number of biological relatives, their degree of relatedness, and their person-years at risk as previously described.[39] An

medRxiv preprint doi: https://doi.org/10.1101/2020.04.04.20053264; this version posted April 7, 2020. The copyright holder for this preprint (which was not certified by peer review) is the author/funder, who has granted medRxiv a license to display the preprint in perpetuity. It is made available under a CC-BY-NC-ND 4.0 International license .

approximate 10:1 ratio of controls to cases was used in the analysis. Relative risk and 95% confidence intervals (CI) were calculated.

Age-standardized sex-specific EOA incidence rates: We selected all individuals with birth year and informative sex who resided in Utah from 2015 until 2018 or died in Utah, whichever happened first. This resulted in identification of 603 individuals with EOA. In contrast to the EOA cohort used to determine familial risk and identification of high-risk pedigrees, we chose to exclude the patients diagnosed with EOA in 2019 because 2018 is the last year the UPDB received death certificates. Demographic characteristics of the EOA cases and non-EOA population were compared using t-tests for continuous variables and chi-square tests for categorical variables (Supplemental Table 2).

Age-standardized incidence rates by sex were calculated using the direct method. Person-years were calculated for affected individuals (cases) and unaffected individuals (controls). Cases contributed one person-year for every year lived in Utah from 2015 until diagnosed with EOA. Person-years contributed from each control was one additional year for every year lived in Utah from 2015 until death or 2018, whichever occurred first. The female-to-male incidence ratios were calculated by dividing the rate in males by that in females for each age group, and the corresponding 95% CI was estimated assuming log-normal distribution. Logistic regression models were used to assess the association between EOA and sex, additionally adjusting for birth year and whether the subjects are Caucasian and Hispanic.

medRxiv preprint doi: https://doi.org/10.1101/2020.04.04.20053264; this version posted April 7, 2020. The copyright holder for this preprint (which was not certified by peer review) is the author/funder, who has granted medRxiv a license to display the preprint in perpetuity. It is made available under a CC-BY-NC-ND 4.0 International license .

Risk Factor Analysis: Specific ICD-9 and ICD-10 codes were used to identify risk factors among study patients (Supplemental Table 1). Conditional logistic regression was used to examine the association between the potential risk factors and EOA. Odds ratios and 95% CI were calculated.

Results:

Identification and demographic detail of the erosive hand osteoarthritis cohort:

To identify individuals diagnosed with EOA, we searched the UPDB for individuals with the ICD-10 code ICD-10 M15.4 from October 2015 – December 2019 and excluded patients with a rheumatoid arthritis diagnosis. This query identified 703 individuals for analysis, consistent with a moderate size statewide cohort of EOA patients. Mean age at time of diagnosis was 67 years ($\pm$ 11.54), 80.23% were female, and 90.9% of individuals were white (Table 1).

Identification of High-Risk Pedigrees:

To test if there is significant familial clustering of EOA in our cohort, we analyzed individuals diagnosed with EOA that linked to a pedigree using the Familial Standardized Incidence Ratio (FSIR) calculation.[39] We identified 240 unrelated, multigenerational, high-risk pedigrees that had at least two living members in the UPDB and an increased clustering of EOA, defined by a FSIR ≥ 2.0 (p-value < 0.05). Of the 240 high-risk pedigrees, the FSIR ranged from 2.0 – 2126 (mean = 20.5, SD = 137.7). Founder birth year, number of descendants, number of affected individuals, and FSIR

medRxiv preprint doi: https://doi.org/10.1101/2020.04.04.20053264; this version posted April 7, 2020. The copyright holder for this preprint (which was not certified by peer review) is the author/funder, who has granted medRxiv a license to display the preprint in perpetuity. It is made available under a CC-BY-NC-ND 4.0 International license .

values are indicated for 10 representative high-risk pedigrees in Table 2. Figure 1 is an example of a multigenerational high-risk pedigree with at least 15 known affected individuals and a FSIR of 2.06. The identification of high-risk pedigrees indicates significant familial clustering of EOA in our cohort.

Familial Risk:

To determine whether there is an increased risk of EOA among closely related individuals, we examined the relative risk of developing EOA in first and second-degree relatives and first and second cousins in our cohort. The risk of developing EOA was approximately 5.5-fold greater in first-degree relatives of EOA cases compared to controls (Relative Risk, 5.53 [95% CI, 2.1 - 14.58], $p < 0.001$) (Table 3). We were unable to detect a significant elevated risk of EOA in second-degree relatives or first and second cousins of EOA cases. Together with the familial clustering of EOA, these data suggests an underlying genetic contribution to EOA.

Age-Standardized Sex-Specific Incidence Rates of EOA:

Hand OA affects females more than males and this trend appears to be valid for EOA[6, 7, 12, 24, 25], although one study failed to find a sex bias in an EOA cohort.[15] To determine if there is an age and sex bias associated with EOA, we examined age-standardized sex-specific incidence rates of EOA in our statewide cohort from October 2015 - December 2018. We found a significant association between sex and age with EOA. Out of 2,065,277 controls and 606 EOA cases, 80% of EOA cases were female (51.5% female in the controls) and older (birth year, EOA cases- 1950.7 ± 11.5 and controls -

medRxiv preprint doi: https://doi.org/10.1101/2020.04.04.20053264; this version posted April 7, 2020. The copyright holder for this preprint (which was not certified by peer review) is the author/funder, who has granted medRxiv a license to display the preprint in perpetuity. It is made available under a CC-BY-NC-ND 4.0 International license .

1979.8 ± 23) when compared to controls ($p < 0.001$) (Supplemental Table 2). We also determined that females have a significantly higher rate of EOA from the ages of 40-89 compared to males, with the highest female-to-male incidence ratios being 4.730 (95% CI, 3.956 – 5.655) in the 60-69 age group (Table 4). Logistic regression analysis indicated that females have a 3.48-fold increased risk of EOA diagnosis compared to males even after adjusting for birth year, race and ethnicity (Relative Risk, 3.48 [95% CI, 2.85 – 4.25). Our results indicate that being female is a significant risk factor for EOA.

Risk Factors Associated with EOA:

Knowledge of risk factors that may contribute to EOA remains incomplete. We analyzed the association of several risk factors with EOA that have been previously associated with general hand OA and EOA (see Supplemental Table 1 for risk factor diagnostic codes).[15, 16, 25, 26] We examined the association of tobacco use, alcohol use, diabetes, and obesity with EOA in our cohort of 703 EOA patients and 3515 controls. In the combined male and female EOA cohort, we identified significant associations between history of alcohol use (Relative Risk, 1.96 [95% CI, 1.05 – 3.64]), history of diabetes (Relative Risk, 1.24 [95% CI, 1.0 – 1.54]), and obesity (Relative Risk, 1.52 [95% CI, 1.24 – 1.86]) with diagnosis of EOA (Table 5). Because females were at a higher risk for EOA (Table 4), we examined the relative risk of the above risk factors independently in males and females. A history of alcohol use (Relative Risk, 5.00 [95% CI, 1.75 – 14.25]) and diabetes (Relative Risk, 1.62 [95% CI, 1.04 – 2.53]) were significantly associated with EOA in males and not in females, while obesity was significant in both groups

medRxiv preprint doi: https://doi.org/10.1101/2020.04.04.20053264; this version posted April 7, 2020. The copyright holder for this preprint (which was not certified by peer review) is the author/funder, who has granted medRxiv a license to display the preprint in perpetuity. It is made available under a CC-BY-NC-ND 4.0 International license .

(males, Relative Risk, 1.80 [95% CI, 1.1 – 2.97] and females, Relative Risk, 1.50 [95% CI, 1.17 – 1.83]) (Table 4). No significant associations were detected between EOA diagnosis and tobacco use. These data indicate that our risk factor analysis has identified both novel and common factors associated with independent cohorts. For females, the main risk factors are age, sex, and obesity whereas alcohol use and diabetes were the main risk factors for males.

Discussion:

We have used a unique statewide medical genetics resource, the Utah Population Database (UPDB), to identify a cohort of individuals diagnosed with erosive hand osteoarthritis (EOA). From this cohort we have i) identified 240 unrelated high-risk pedigrees demonstrating familial enrichment EOA, ii) determined that first-degree relatives of an individual with EOA is at approximately 5.5-fold increased risk of developing EOA, and iii) that sex, age, alcohol use, diabetes, and obesity are significant risk factors associated with EOA. In sum, these data suggest that both genetic and physiological factors contribute to the development of EOA in a large population-based cohort.

Genetic Involvement in EOA:

Although hand OA is highly heritable[20], few genes with large effects have been associated with the onset and progression of hand OA[6, 7], and only three genes have been associated with the EOA phenotype.[21-23] The predominant approach to discover hand OA gene variants has been genome-wide association studies (GWAS)[40-45], which

medRxiv preprint doi: https://doi.org/10.1101/2020.04.04.20053264; this version posted April 7, 2020. The copyright holder for this preprint (which was not certified by peer review) is the author/funder, who has granted medRxiv a license to display the preprint in perpetuity. It is made available under a CC-BY-NC-ND 4.0 International license .

relies on large cohorts of cases and controls and well defined phenotypes. The heterogeneous nature of hand OA has likely been a confounding factor in some GWAS. An alternative approach to GWAS is to study families with highly penetrant, severe or early-onset forms of OA.

The study of rare variants in affected families is a powerful way to identify gene variants with a determinate effect on disease development.[46-49] Using the UPDB, we have identified 240 large multigenerational, high-risk pedigrees segregating EOA as an apparent dominate trait. Although a previous study described association of EOA in sibling pairs[24], our study is the first to identify a large number of multigenerational EOA pedigrees and determine relative risk among family members. Identification of causal gene variants in these families will inform us about genes and pathways that when disrupted contribute to EOA.

Risk Factors Associated with EOA:

We examined the risk of developing EOA based on sex and age and found that females are 3.48-fold more likely to develop EOA than males with the highest female-to-male incidence ratios in the 60-69 age group. This suggests that EOA is similar to general hand OA in that females are disproportionately affected.[6, 7, 12, 24, 25] We further identified alcohol use, diabetes, and obesity as risk factors in our EOA cohort. We did not find a significant association with tobacco use. Our data are consistent with other studies that have examined risk factors for EOA in other populations.[15, 16, 25, 26] When we subdivide risk factors based on sex, we found that alcohol use and diabetes are EOA risk factors

medRxiv preprint doi: https://doi.org/10.1101/2020.04.04.20053264; this version posted April 7, 2020. The copyright holder for this preprint (which was not certified by peer review) is the author/funder, who has granted medRxiv a license to display the preprint in perpetuity. It is made available under a CC-BY-NC-ND 4.0 International license .

in males and not in females, while obesity is a common risk factor to both sexes. Awareness of these comorbidities observed to be significantly associated with EOA in the current study may help guide the clinical diagnosis of this condition in at-risk populations.

This study has several limitations. As for all database studies, it is unclear how errors in diagnostic coding would impact the study findings, and manual chart review was not possible for all affected and non-affected individuals included in the analysis. We have initiated recruitment of a small number of families for sequencing studies and have found that approximately 80% of patients had the correct diagnosis (unpublished observations), and prior investigation has shown 93-97% rates of accuracy for UPDB diagnostic coding when compared to manual chart review.[50, 51] Additionally, the relative risk and FSIR calculations are likely underestimates for EOA, which is due to several factors. Our cohort was limited to individuals with an ICD-10 diagnosis for EOA, which has only been in use since October 2015, and our high-risk pedigree analysis can only identify individuals that have been diagnosed in Utah. We are missing individuals who were diagnosed using different codes prior to October 2015 and those that were diagnosed out of state. Because of this, in high-risk pedigrees we consider individuals without an EOA diagnosis as ‘affection status unknown’ until we can definitely determine if they are unaffected or affected. Also, our study does not evaluate the extent to which EOA is genetic. The enrichment of EOA in pedigrees is suggestive of a genetic contribution, especially in distant relatives, but we cannot rule out outer factors

medRxiv preprint doi: https://doi.org/10.1101/2020.04.04.20053264; this version posted April 7, 2020. The copyright holder for this preprint (which was not certified by peer review) is the author/funder, who has granted medRxiv a license to display the preprint in perpetuity. It is made available under a CC-BY-NC-ND 4.0 International license .

such as environmental influence on EOA particularly in light of the risk factor associations we observed in this study.

To conclude, we demonstrated that EOA demonstrates familial enrichment, an increased relative risk among first-degree relatives, and identified significant EOA risk factors. Taken together, these findings suggest that EOA has a genetic and environmental component to its etiology. Genomic analysis of affected and unaffected individuals within our high-risk pedigrees holds promise in identifying genetic variants associated with EOA. Furthermore, by identifying and studying gene variants that cause EOA, we may learn about the biological mechanisms that lead to other forms of OA, which may provide significant insight into surgical treatment or therapeutic intervention.

Acknowledgments and affiliations: This study was funded by the Osteoarthritis Discovery and Treatment Initiative granted by the Skaggs Foundation for Research to the University of Utah Department of Orthopaedics. We also acknowledge the Pedigree and Population Resource of the Huntsman Cancer Institute, University of Utah (funded in part by the Huntsman Cancer Foundation) for its role in the ongoing collection, maintenance and support of the Utah Population Database (UPDB). We also acknowledge partial support for the UPDB through grant P30 CA2014 from the National Cancer Institute, University of Utah and from the University of Utah's Program in Personalized Health and Center for Clinical and Translational Science.
A subset of data in this manuscript was presented at the 2019 ACR/ARP annual meeting: Kazmers N, Novak K, Yu Z, Barker T, Abraham T, Romero R, Jurynec M.

medRxiv preprint doi: https://doi.org/10.1101/2020.04.04.20053264; this version posted April 7, 2020. The copyright holder for this preprint **(which was not certified by peer review)** is the author/funder, who has granted medRxiv a license to display the preprint in perpetuity. It is made available under a CC-BY-NC-ND 4.0 International license .

Identification of Genetic Variants Associated with Erosive Hand Osteoarthritis Using Pedigrees from a State-Wide Population-Based Cohort [abstract]. *Arthritis Rheumatol.* 2019; 71 (suppl 10).

medRxiv preprint doi: https://doi.org/10.1101/2020.04.04.20053264; this version posted April 7, 2020. The copyright holder for this preprint (which was not certified by peer review) is the author/funder, who has granted medRxiv a license to display the preprint in perpetuity. It is made available under a CC-BY-NC-ND 4.0 International license .

References:

1. Goldring SR, Goldring MB. Clinical aspects, pathology and pathophysiology of osteoarthritis. J Musculoskelet Neuronal Interact. 2006 Oct-Dec; 6(4):376-378.
2. Neogi T. The epidemiology and impact of pain in osteoarthritis. Osteoarthritis Cartilage. 2013 Sep; 21(9):1145-1153.
3. Pereira D, Peleteiro B, Araujo J, Branco J, Santos RA, Ramos E. The effect of osteoarthritis definition on prevalence and incidence estimates: a systematic review. Osteoarthritis Cartilage. 2011 Nov; 19(11):1270-1285.
4. Snyder EA, Alvarez C, Golightly YM, Renner JB, Jordan JM, Nelson AE. Incidence and progression of hand osteoarthritis in a large community-based cohort: the Johnston County Osteoarthritis Project. Osteoarthritis Cartilage. 2020 Feb 19.
5. Zhang Y, Niu J, Kelly-Hayes M, Chaisson CE, Aliabadi P, Felson DT. Prevalence of symptomatic hand osteoarthritis and its impact on functional status among the elderly: The Framingham Study. Am J Epidemiol. 2002 Dec 1; 156(11):1021-1027.
6. Marshall M, Watt FE, Vincent TL, Dziedzic K. Hand osteoarthritis: clinical phenotypes, molecular mechanisms and disease management. Nat Rev Rheumatol. 2018 Nov; 14(11):641-656.
7. Kloppenburg M, Kwok WY. Hand osteoarthritis--a heterogeneous disorder. Nat Rev Rheumatol. 2011 Nov 22; 8(1):22-31.
8. Banks SE. Erosive osteoarthritis: a current review of a clinical challenge. Clin Rheumatol. 2010 Jul; 29(7):697-706.
9. Marshall M, Nicholls E, Kwok WY, Peat G, Kloppenburg M, van der Windt D, et al. Erosive osteoarthritis: a more severe form of radiographic hand osteoarthritis rather than a distinct entity? Ann Rheum Dis. 2015 Jan; 74(1):136-141.
10. Punzi L, Favero M, Frallonardo P, Ramonda R. Time to redefine erosive osteoarthritis. RMD Open. 2015; 1(1):e000105.
11. Crain DC. Interphalangeal osteoarthritis. JAMA. 1961 Mar 25; 175:1049-1053.
12. Peter JB, Pearson CM, Marmor L. Erosive osteoarthritis of the hands. Arthritis Rheum. 1966 Jun; 9(3):365-388.
13. Addimanda O, Mancarella L, Dolzani P, Punzi L, Fioravanti A, Pignotti E, et al. Clinical and radiographic distribution of structural damage in erosive and nonerosive hand osteoarthritis. Arthritis Care Res (Hoboken). 2012 Jul; 64(7):1046-1053.
14. Punzi L, Ramonda R, Sfriso P. Erosive osteoarthritis. Best Pract Res Clin Rheumatol. 2004 Oct; 18(5):739-758.
15. Kwok WY, Kloppenburg M, Rosendaal FR, van Meurs JB, Hofman A, Bierma-Zeinstra SM. Erosive hand osteoarthritis: its prevalence and clinical impact in the general population and symptomatic hand osteoarthritis. Ann Rheum Dis. 2011 Jul; 70(7):1238-1242.
16. Marshall M, Peat G, Nicholls E, van der Windt D, Myers H, Dziedzic K. Subsets of symptomatic hand osteoarthritis in community-dwelling older adults in the United Kingdom: prevalence, inter-relationships, risk factor profiles and clinical characteristics at baseline and 3-years. Osteoarthritis Cartilage. 2013 Nov; 21(11):1674-1684.
17. Kloppenburg M, Kroon FP, Blanco FJ, Doherty M, Dziedzic KS, Greibrokk E, et al. 2018 update of the EULAR recommendations for the management of hand osteoarthritis. Ann Rheum Dis. 2019 Jan; 78(1):16-24.
18. Ramos YF, Meulenbelt I. Implementation of Functional Genomics for Bench-to-Bedside Transition in Osteoarthritis. Curr Rheumatol Rep. 2015 Aug; 17(8):53.

medRxiv preprint doi: https://doi.org/10.1101/2020.04.04.20053264; this version posted April 7, 2020. The copyright holder for this preprint (which was not certified by peer review) is the author/funder, who has granted medRxiv a license to display the preprint in perpetuity. It is made available under a CC-BY-NC-ND 4.0 International license .

19. Thysen S, Luyten FP, Lories RJ. Targets, models and challenges in osteoarthritis research. Dis Model Mech. 2015 Jan; 8(1):17-30.
20. Ishimori ML, Altman RD, Cohen MJ, Cui J, Guo X, Rotter JI, et al. Heritability patterns in hand osteoarthritis: the role of osteophytes. Arthritis Res Ther. 2010; 12(5):R180.
21. Pattrick M, Manhire A, Ward AM, Doherty M. HLA-A, B antigens and alpha 1-antitrypsin phenotypes in nodal generalised osteoarthritis and erosive osteoarthritis. Ann Rheum Dis. 1989 Jun; 48(6):470-475.
22. Ramonda R, Musacchio E, Campana C, Frigato M, Frallonardo P, Barbieri V, et al. Immunogenetic aspects of erosive osteoarthritis of the hand in patients from northern Italy. Scand J Rheumatol. 2011 Mar; 40(2):139-144.
23. Stern AG, de Carvalho MRC, Buck GA, Adler RA, Rao TPS, Disler D, et al. Association of erosive hand osteoarthritis with a single nucleotide polymorphism on the gene encoding interleukin-1 beta. Osteoarthritis and Cartilage. 2003; 11(6):394-402.
24. Bijsterbosch J, van Bemmel JM, Watt I, Meulenbelt I, Rosendaal FR, Huizinga TW, et al. Systemic and local factors are involved in the evolution of erosions in hand osteoarthritis. Ann Rheum Dis. 2011 Feb; 70(2):326-330.
25. Haugen IK, Englund M, Aliabadi P, Niu J, Clancy M, Kvien TK, et al. Prevalence, incidence and progression of hand osteoarthritis in the general population: the Framingham Osteoarthritis Study. Ann Rheum Dis. 2011 Sep; 70(9):1581-1586.
26. Haugen IK, Magnusson K, Turkiewicz A, Englund M. The Prevalence, Incidence, and Progression of Hand Osteoarthritis in Relation to Body Mass Index, Smoking, and Alcohol Consumption. J Rheumatol. 2017 Sep; 44(9):1402-1409.
27. Cannon-Albright LA, Goldgar DE, Neuhausen S, Gruis NA, Anderson DE, Lewis CM, et al. Localization of the 9p melanoma susceptibility locus (MLM) to a 2-cM region between D9S736 and D9S171. Genomics. 1994 Sep 1; 23(1):265-268.
28. Cannon-Albright LA, Thomas TC, Bishop DT, Skolnick MH, Burt RW. Characteristics of familial colon cancer in a large population data base. Cancer. 1989 Nov 1; 64(9):1971-1975.
29. Goldgar DE, Cannon-Albright LA, Oliphant A, Ward JH, Linker G, Swensen J, et al. Chromosome 17q linkage studies of 18 Utah breast cancer kindreds. Am J Hum Genet. 1993 Apr; 52(4):743-748.
30. Lakhani SR, Gusterson BA, Jacquemier J, Sloane JP, Anderson TJ, van de Vijver MJ, et al. The pathology of familial breast cancer: histological features of cancers in families not attributable to mutations in BRCA1 or BRCA2. Clin Cancer Res. 2000 Mar; 6(3):782-789.
31. Miki Y, Swensen J, Shattuck-Eidens D, Futreal PA, Harshman K, Tavtigian S, et al. A strong candidate for the breast and ovarian cancer susceptibility gene BRCA1. Science. 1994 Oct 7; 266(5182):66-71.
32. Slattery ML, Kerber RA. A comprehensive evaluation of family history and breast cancer risk. The Utah Population Database. JAMA. 1993 Oct 6; 270(13):1563-1568.
33. Slattery ML, Kerber RA. Family history of cancer and colon cancer risk: the Utah Population Database. J Natl Cancer Inst. 1994 Nov 2; 86(21):1618-1626.
34. Tavtigian SV, Simard J, Rommens J, Couch F, Shattuck-Eidens D, Neuhausen S, et al. The complete BRCA2 gene and mutations in chromosome 13q-linked kindreds. Nat Genet. 1996 Mar; 12(3):333-337.
35. Abbott D, Brockmeyer D, Neklason DW, Teerlink C, Cannon-Albright LA. Population-based description of familial clustering of Chiari malformation Type I. J Neurosurg. 2018 Feb; 128(2):460-465.
36. Coon H, Darlington TM, DiBlasi E, Callor WB, Ferris E, Fraser A, et al. Genome-wide significant regions in 43 Utah high-risk families implicate multiple genes involved in risk for completed suicide. Mol Psychiatry. 2018 Oct 23.

medRxiv preprint doi: https://doi.org/10.1101/2020.04.04.20053264; this version posted April 7, 2020. The copyright holder for this preprint (which was not certified by peer review) is the author/funder, who has granted medRxiv a license to display the preprint in perpetuity. It is made available under a CC-BY-NC-ND 4.0 International license .

37. Kazmers NH, Yu Z, Barker T, Abraham T, Romero R, Jurynec MJ. Evaluation for Kienbock Disease Familial Clustering: A Population-Based Cohort Study. J Hand Surg Am. 2020 Jan; 45(1):1-8 e1.
38. Neuhausen SL, Farnham JM, Kort E, Tavtigian SV, Skolnick MH, Cannon-Albright LA. Prostate cancer susceptibility locus HPC1 in Utah high-risk pedigrees. Hum Mol Genet. 1999 Dec; 8(13):2437-2442.
39. Kerber RA. Method for calculating risk associated with family history of a disease. Genet Epidemiol. 1995; 12(3):291-301.
40. den Hollander W, Boer CG, Hart DJ, Yau MS, Ramos YFM, Metrustry S, et al. Genome-wide association and functional studies identify a role for matrix Gla protein in osteoarthritis of the hand. Ann Rheum Dis. 2017 Dec; 76(12):2046-2053.
41. Hamalainen S, Solovieva S, Vehmas T, Luoma K, Leino-Arjas P, Hirvonen A. Genetic influences on hand osteoarthritis in Finnish women--a replication study of candidate genes. PLoS One. 2014; 9(5):e97417.
42. Kerkhof HJ, Lories RJ, Meulenbelt I, Jonsdottir I, Valdes AM, Arp P, et al. A genome-wide association study identifies an osteoarthritis susceptibility locus on chromosome 7q22. Arthritis Rheum. 2010 Feb; 62(2):499-510.
43. Stefansson SE, Jonsson H, Ingvarsson T, Manolescu I, Jonsson HH, Olafsdottir G, et al. Genomewide scan for hand osteoarthritis: a novel mutation in matrilin-3. Am J Hum Genet. 2003 Jun; 72(6):1448-1459.
44. Styrkarsdottir U, Thorleifsson G, Helgadottir HT, Bomer N, Metrustry S, Bierma-Zeinstra S, et al. Severe osteoarthritis of the hand associates with common variants within the ALDH1A2 gene and with rare variants at 1p31. Nat Genet. 2014 May; 46(5):498-502.
45. Zhai G, van Meurs JB, Livshits G, Meulenbelt I, Valdes AM, Soranzo N, et al. A genome-wide association study suggests that a locus within the ataxin 2 binding protein 1 gene is associated with hand osteoarthritis: the Treat-OA consortium. J Med Genet. 2009 Sep; 46(9):614-616.
46. Chakravarti A, Turner TN. Revealing rate-limiting steps in complex disease biology: The crucial importance of studying rare, extreme-phenotype families. Bioessays. 2016 Jun; 38(6):578-586.
47. Jurynec MJ, Sawitzke AD, Beals TC, Redd MJ, Stevens J, Otterud B, et al. A hyperactivating proinflammatory RIPK2 allele associated with early-onset osteoarthritis. Hum Mol Genet. 2018 Jul 1; 27(13):2383-2391.
48. Ramos YF, Bos SD, van der Breggen R, Kloppenburg M, Ye K, Lameijer EW, et al. A gain of function mutation in TNFRSF11B encoding osteoprotegerin causes osteoarthritis with chondrocalcinosis. Ann Rheum Dis. 2015 Sep; 74(9):1756-1762.
49. Sliz E, Taipale M, Welling M, Skarp S, Alaraudanjoki V, Ignatius J, et al. TUFT1, a novel candidate gene for metatarsophalangeal osteoarthritis, plays a role in chondrogenesis on a calcium-related pathway. PLoS One. 2017; 12(4):e0175474.
50. Peterson K, Firszt R, Fang J, Wong J, Smith KR, Brady KA. Risk of Autoimmunity in EoE and Families: A Population-Based Cohort Study. Am J Gastroenterol. 2016 Jul; 111(7):926-932.
51. Samadder NJ, Curtin K, Tuohy TM, Pappas L, Boucher K, Provenzale D, et al. Characteristics of missed or interval colorectal cancer and patient survival: a population-based study. Gastroenterology. 2014 Apr; 146(4):950-960.

medRxiv preprint doi: https://doi.org/10.1101/2020.04.04.20053264; this version posted April 7, 2020. The copyright holder for this preprint (which was not certified by peer review) is the author/funder, who has granted medRxiv a license to display the preprint in perpetuity. It is made available under a CC-BY-NC-ND 4.0 International license .

Figure Legends:

Figure 1 – Example of a high-risk erosive hand osteoarthritis pedigree identified in the Utah Population Database. Circles = females, squares = males, arrow = family founder, slashes = deceased. White circles/squares = affection status unknown. Black circles/squares = individuals affected with EOA.

Table Legends:

Table 1 – Baseline Patient Characteristics of the Erosive Hand Osteoarthritis Cohort.

Table 2 – High-Risk Pedigrees with Excess Familial Clustering of Erosive Hand Osteoarthritis. FSIR and p-values were calculated according to Kerber[39].

Table 3 – Increased Familial Risk of Erosive Hand Osteoarthritis.

Table 4 – Age-Specific Incidence Rates of EOA by Sex and Female-to-Male Incidence Ratios.

Table 5 – Risk Factors Associated with Erosive Hand Osteoarthritis.

Supplemental Table 1 – Identification of Risk Factors Using Diagnostic Coding.

Supplemental Tale 2 – Study Population Used for Age-Standardized Sex-Specific Incidence Rates of EOA.

medRxiv preprint doi: https://doi.org/10.1101/2020.04.04.20053264; this version posted April 7, 2020. The copyright holder for this preprint (which was not certified by peer review) is the author/funder, who has granted medRxiv a license to display the preprint in perpetuity. It is made available under a CC-BY-NC-ND 4.0 International license .

Key messages:

What is already known about this subject?

1. Erosive hand osteoarthritis (EOA) is a serve, rapidly progressing form of osteoarthritis. Previous studies have identified several associated risk factors in EOA cohorts.

What does this study add?

2. Our study indicates that EOA can cluster in large, multigenerational families. First-degree relatives of an individual diagnosed with EOA has an elevated risk of developing the EOA, suggesting a genetic contribution to the disease.

3. Risk factor analysis indicates that the main risk factors for females are age, sex, and obesity, whereas alcohol use and diabetes were the main risk factors for males.

How might this impact on clinical practice or future developments?

4. Our findings may guide the clinical diagnosis and treatment of EOA in at-risk populations.

5. Genetic analysis of our high-risk EOA pedigrees will allow for the identification of casual gene variants, which may inform rational therapeutic development to prevent or slow the progression of EOA.

medRxiv preprint doi: https://doi.org/10.1101/2020.04.04.20053264; this version posted April 7, 2020. The copyright holder for this preprint (which was not certified by peer review) is the author/funder, who has granted medRxiv a license to display the preprint in perpetuity. It is made available under a CC-BY-NC-ND 4.0 International license .

Table 1 - Baseline Patient Characteristics of the Erosive Hand Osteoarthritis Cohort

Number of Individuals	703
Age (years)	67 ± 11.54 (Range 12-94)
Race	
White	639 (90.9%)
Non-white	64 (9.1%)
Sex	
Female	564 (80.23%)
Male	139 (19.77%)

medRxiv preprint doi: https://doi.org/10.1101/2020.04.04.20053264; this version posted April 7, 2020. The copyright holder for this preprint (which was not certified by peer review) is the author/funder, who has granted medRxiv a license to display the preprint in perpetuity. It is made available under a CC-BY-NC-ND 4.0 International license .

Table 2 - High-Risk Pedigrees with Excess Familial Clustering of Erosive Hand Osteoarthritis

Founder Birth Year	Number of Descendants	Number of Affected Individuals	FSIR#
1682*	109,720	15	2.1
1789	81,204	12	2.1
1758	34,750	8	3.5
1795	300,10	8	3.0
1715	38,586	8	2.4
1780	34,156	7	2.8
1794	7,262	5	9.7
1779	13,015	5	4.7
1762	6677	4	11.8
1805	5,182	3	15.5

Abbreviations: FSIR = familial standardized incidence ratio.

* indicates pedigree represented in Figure 1.

# indicates that all FSIR p-values are $p < 0.05$.

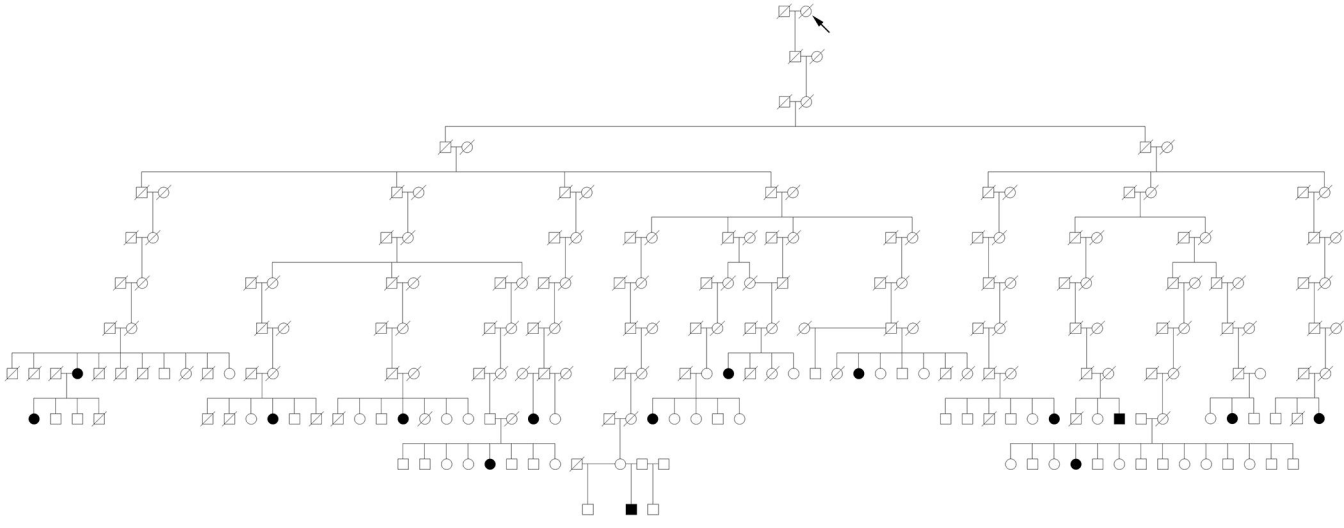

medRxiv preprint doi: https://doi.org/10.1101/2020.04.04.20053264; this version posted April 7, 2020. The copyright holder for this preprint (which was not certified by peer review) is the author/funder, who has granted medRxiv a license to display the preprint in perpetuity. It is made available under a CC-BY-NC-ND 4.0 International license .

Table 3 - Increased Familial Risk of Erosive Hand Osteoarthritis

Relationship	Relative Risk (Coefficient and 95% CI)	p-value
Proband	*Reference Group*	-
First-degree relative	5.53 (2.1 - 14.58)	0.001
Second-degree relative	2.14 (0.46 - 10.06)	0.334
First cousins	11.08 (1.09 - 112.58)	0.166
Second cousins	0.66 (0.4 - 1.06)	0.087

Abbreviations: CI - 95% confidence interval

medRxiv preprint doi: https://doi.org/10.1101/2020.04.04.20053264; this version posted April 7, 2020. The copyright holder for this preprint (which was not certified by peer review) is the author/funder, who has granted medRxiv a license to display the preprint in perpetuity. It is made available under a CC-BY-NC-ND 4.0 International license .

Table 4 - Age-Specific Incidence Rate of EOA by Sex and Female-to-Male Incidence Ratios

Age (years)	Male		Female		Female-to-male ratio (95% CI)
	N cases	Rate Per 1000	N cases	Rate Per 1000	
< 20	2	0.002	8	0.007	4.135 (0.878, 19.472)
20-29	11	0.02	10	0.016	0.790 (0.336, 1.860)
30-39	7	0.012	16	0.026	2.073 (0.853, 5.038)
40-49	34	0.07	76	0.149	2.129 (1.421, 3.189)
50-59	79	0.182	388	0.851	4.676 (3.671, 5.956)
60-69	144	0.37	728	1.753	4.730 (3.956, 5.655)
70-79	151	0.646	519	1.993	3.080 (2.570, 3.693)
80-89	49	0.436	178	1.281	2.936 (2.140, 4.028)
90+	7	0.252	17	0.378	1.475 (0.612, 3.558)

medRxiv preprint doi: https://doi.org/10.1101/2020.04.04.20053264; this version posted April 7, 2020. The copyright holder for this preprint (which was not certified by peer review) is the author/funder, who has granted medRxiv a license to display the preprint in perpetuity. It is made available under a CC-BY-NC-ND 4.0 International license .

Table 5 - Risk Factors Associated with Erosive Hand Osteoarthritis

Risk Factor/Clinical Diagnosis	EOA patients N (%)	Controls N (%)	Relative Risk with 95% Confidence Interval	p-value
Total number of patients	703	3515	-	-
Male	139 (19.77%)	695 (19.77%)	-	-
Female	564 (80.23%)	2820 (80.23%)	-	-
Tobacco Use	122	573	**1.08 (0.87 - 1.34)**	**0.487**
Male	34 (27.87%)	160(27.92%)	**1.08 (0.71 - 1.65)**	**0.715**
Female	88 (72.13%)	413 (72.08%)	**1.08 (0.84 - 1.39)**	**0.554**
Alcohol Use	14	36	**1.96 (1.05 - 3.64)**	**0.034**
Male	7 (50.00%)	7 (19.44%)	**5.00 (1.75 - 14.25)**	**0.003**
Female	7 (50.00%)	29 (80.56%)	**1.21 (0.53 - 2.78)**	**0.653**
Diabetes	129	540	**1.24 (1.0 - 1.54)**	**0.046**
Male	34 (26.36%)	118 (21.85%)	**1.62 (1.04 - 2.53)**	**0.035**
Female	95 (73.64%)	422 (78.15%)	**1.15 (0.90 - 1.47)**	**0.255**
Obesity	150	537	**1.52 (1.24 - 1.86)**	**< 0.001**
Male	2 (16.67%)	76 (14.15%)	**1.80 (1.1 - 2.97)**	**0.021**
Female	125 (83.33%)	461 (85.85%)	**1.50(1.17 - 1.83)**	**0.001**